4155

ORDER NO. AD9212407C1
A6

Service Manual

COMPACT disc DIGITAL AUDIO

DIGITAL

MASH* multi-stage noise shaping

Compact Disc Player
SL-PG440

Colour

(K) ... Black Type

Area

Suffix for Model No.	Area	Colour
(P)	U.S.A.	(K)
(PC)	Canada.	

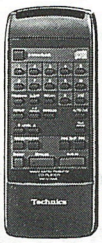

※
- Technics (or Panasonic) developed the world's first MASH type DAC and ADC. MASH technology was invented by NTT (LSI Labs).
- MASH is a trademark of NTT.

NEW MECHANISM SERIES (RAEO111Z)

SPECIFICATIONS

■ Audio

No. of channels	2 (left and right, stereo)
Frequency response	2–20,000 Hz, ±1 dB
Output voltage	2 V (at 0 dB)
Dynamic range	92 dB
S/N	100 dB
Total harmonic distortion	0.007 % (1 kHz, 0 dB)
Wow and flutter	Below measurable limit
DA converter	MASH (1 bit)
Output impedance	Approx. 1 kΩ
Load impedance	More than 10 kΩ
Headphone output level	15 mW max. 32Ω (adjustable)

■ Pickup

Wavelength	780 nm

■ General

Power consumption	12 W
Power supply	AC 120 V, 60 Hz
Dimensions (W × H × D)	430 × 102.6 × 283.4 mm (16 $^{15}/_{16}$″ × 4 $^{1}/_{32}$″ × 11 $^{5}/_{32}$″)
Weight	3.4 kg (7.5 lb)

Note:
Design and specifications are subject to change without notice.
Weight and dimensions are approximate.

Technics

■ CONTENTS

	Page
PRECAUTION OF LASER DIODE	2
SAFETY PRECAUTION	2
ACCESSORIES	3
CONNECTIONS	3
FRONT PANEL CONTROLS AND FUNCTIONS	4
CONCERNING THE REMOTE CONTROL	5
BASIC OPERATION PROCEDURE	6
HANDLING PRECAUTIONS FOR TRAVERSE DECK	7
DISASSEMBLY INSTRUCTION	8~13
DISPLAY FUNCTION OF AUTOMATICALLY-ADJUSTED RESULTS (SELF-CHECK FUNCTION)	14
DIGITAL SERVO SYSTEM	15, 16
TROUBLESHOOTING GUIDE	17, 18
MEASURMENTS AND ADJUSTMENTS	19, 20
TERMINAL FUNCTION OF IC'S	21~24
BLOCK DIAGRAM	25~27
SCHEMATIC DIAGRAM	28~33
PRINTED CIRCUIT BOARDS	34~36
WIRING CONNECTION DIAGRAM	37
INTERNAL CONNECTION OF FL	38
EXPLODED VIEWS	39~41
REPLACEMENT PARTS LIST	42~44
RESISTORS AND CAPACITORS	45, 46
PACKAGING	46

■ PRECAUTION OF LASER DIODE

CAUTION: This unit utilizes a class 1 laser. Invisible laser radiation is emitted from the optical pickup lens when the unit is turned on:

1. Do not look directly into the pickup lens.
2. Do not use optical instruments to look at the pickup lens.
3. Do not adjust the preset variable resistor on the optical pickup.
4. Do not disassemble the optical pickup unit.
5. If the optical pickup is replaced, use the manufactures specified replacement pickup only.
6. Use of control or adjustments or performance of procedures other than those specified herin may result in hazardous radiation exposure.

■ SAFETY PRECAUTION (This "safety precaution" is applied only in U.S.A.)

1. Before servicing, unplug the power cord to prevent an electric shock.
2. When replacing parts, use only manufacturer's recommended components for safety.
3. Check the condition of the power cord. Replace if wear or damage is evident.
4. After servicing, be sure to restore the lead dress, insulation barriers, insulation papers, shields, etc.
5. Before returning the serviced equipment to the customer, be sure to make the following insulation resistance test to prevent the customer from being exposed to a shock hazard.

• INSULATION RESISTANCE TEST

1. Unplug the power cord and short the two prongs of the plug with a jumper wire.
2. Turn on the power switch.
3. Measure the resistance value with ohmmeter between the jumpered AC plug and each exposed metal cabinet part, such as screwheads antenna, control shafts, handle brackets, etc. Equipment with antenna terminals should read between 3MΩ and 5.2MΩ to all exposed parts. (Fig. A) Equipment without antenna terminals should read approximately infinity to all exposed parts. (Fig. B)

Note: Some exposed parts may be isolated from the chassis by design. These will read infinity.

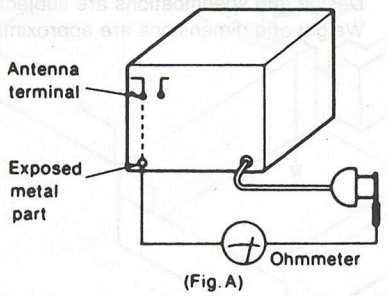

(Fig. A)

Resistance = 3MΩ—5.2MΩ

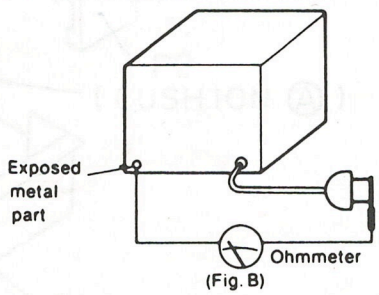

(Fig. B)

Resistance = Approx ∞

4. If the measurement is outside the specified limits, there is a possibilty of a shock hazard. The equipment should be repaired and rechecked before it is returned to the customer.

■ ACCESSORIES

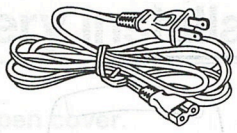

AC power supply cord (polarized) 1 pc.
(For U.S.A.: SJA175-1, for Canada: SJA172)

Remote control transmitter (RAK-SL304W) 1 pc.

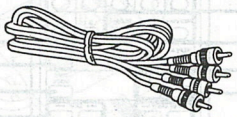

Stereo connection cable (SJP2249-3) 1 pc.

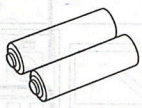

Batteries "AAA" (R03/UM4) 2 pcs.
for remote control transmitter

Note:
These are available on sale route.

■ CONNECTIONS

Before making connections, be sure that the power of this unit and all other system components is first turned off.
See the operating instructions of the amplifier or the cassette deck for details.

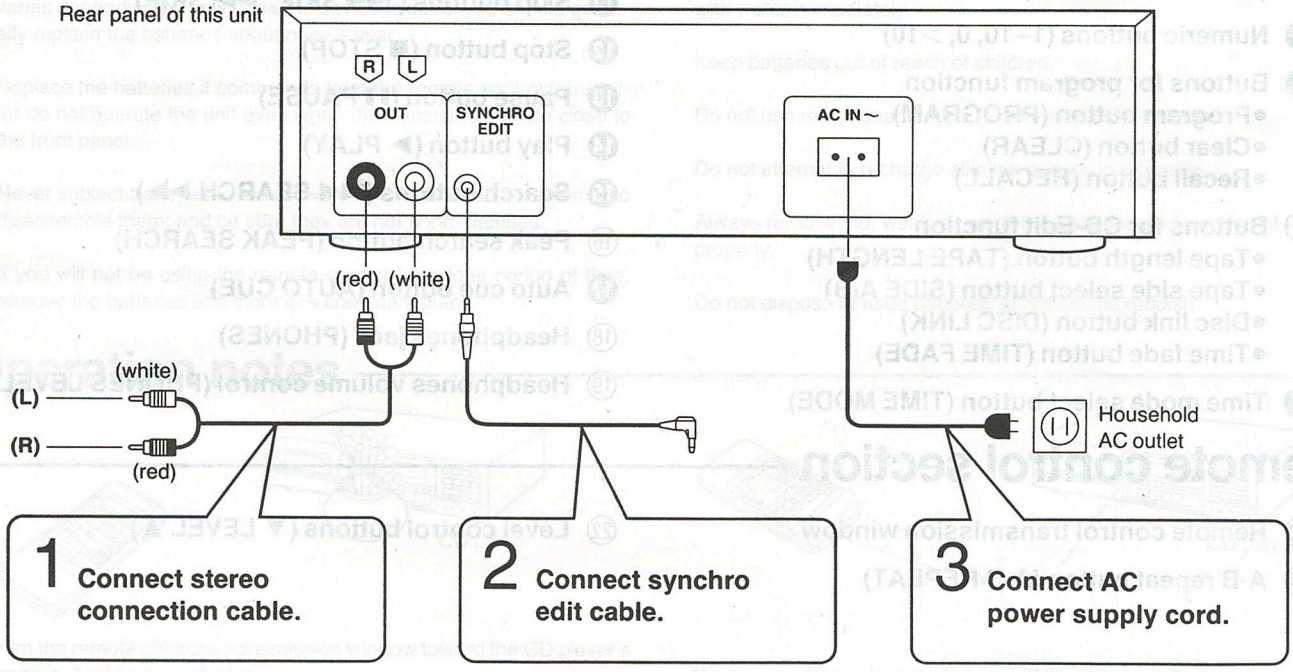

1 **Connect the stereo connection cable (included) to the "CD" or "AUX" terminals of the amplifier.**

2 **Connect the synchro edit cable (SJP2257T, included with the cassette deck) to the "SYNCHRO EDIT" terminal of the Technics cassette deck.**

3 **Connect the AC power supply cord (included) to the "AC OUTLET" of the amplifier or the household AC outlet (AC 120 V/60 Hz).**

■ FRONT PANEL CONTROLS AND FUNCTIONS

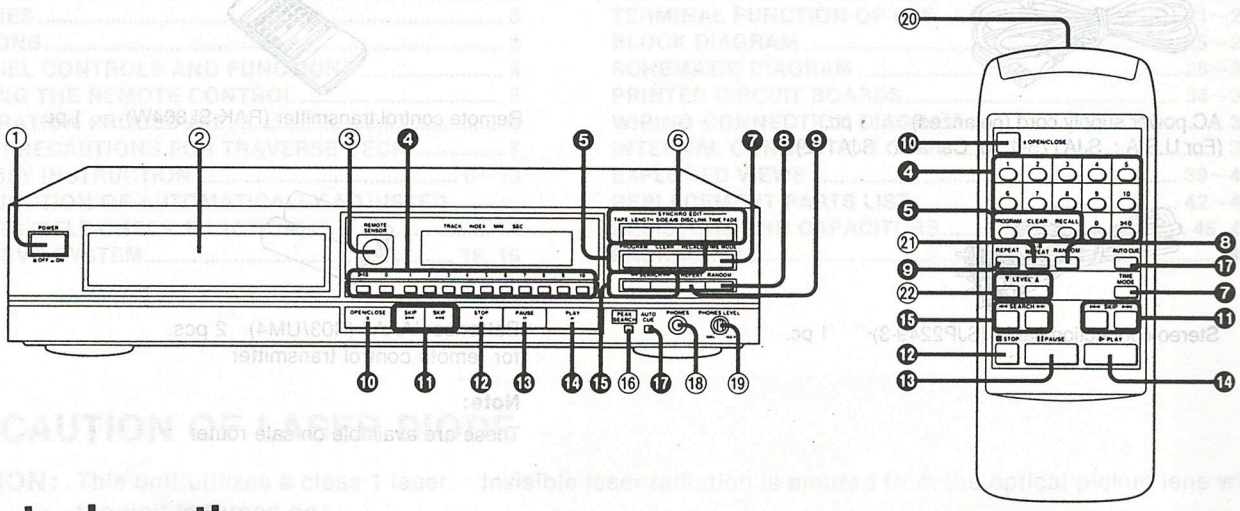

Control section

① Power switch (POWER)
② Disc tray
③ Remote control signal sensor (REMOTE SENSOR)
④ Numeric buttons (1–10, 0, >10)
⑤ Buttons for program function
- •Program button (PROGRAM)
- •Clear button (CLEAR)
- •Recall button (RECALL)

⑥ Buttons for CD-Edit function
- •Tape length button (TAPE LENGTH)
- •Tape side select button (SIDE A/B)
- •Disc link button (DISC LINK)
- •Time fade button (TIME FADE)

⑦ Time mode select button (TIME MODE)
⑧ Random button (RANDOM)
⑨ Repeat button (REPEAT)
⑩ Disc tray open/close button (▲ OPEN/CLOSE)
⑪ Skip buttons (⏮ SKIP, ⏭ SKIP)
⑫ Stop button (■ STOP)
⑬ Pause button (❚❚ PAUSE)
⑭ Play button (▶ PLAY)
⑮ Search buttons (◀◀ SEARCH ▶▶)
⑯ Peak search button (PEAK SEARCH)
⑰ Auto cue button (AUTO CUE)
⑱ Headphones jack (PHONES)
⑲ Headphones volume control (PHONES LEVEL)

Remote control section

⑳ Remote control transmission window
㉑ A-B repeat button (A-B REPEAT)
㉒ Level control buttons (▼ LEVEL ▲)

■ CONCERNING THE REMOTE CONTROL

Battery installation

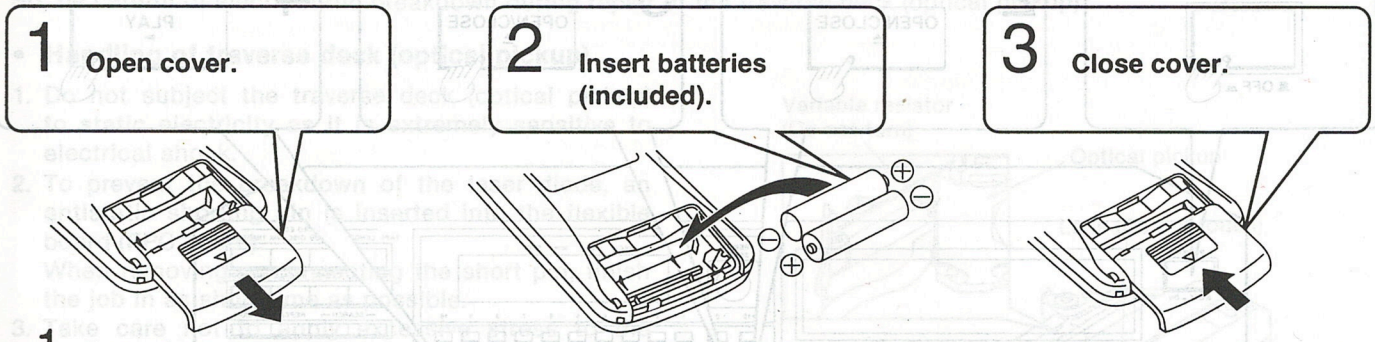

1 Open the cover.
Press gently and slide the cover out.

2 Insert the batteries included with this unit.
When you need to replace these batteries, use two UM-4 "AAA", IEC R03 (1.5 V) or equivalent batteries.

Be sure to insert batteries so that their positive (+) and negative (−) polarities match the indications in the compartment. Batteries installed incorrectly may leak and cause damage.
Refer to "Use of batteries" below for additional information.

3 Close the cover.

Use of batteries

Do not mix old and new batteries or batteries of different types (carbon and alkaline, etc).

The average battery life is about one year. Although the battery life varies depending on how often the device is used, you should generally replace the batteries about once a year.

Replace the batteries if commands from the remote control transmitter do not operate the unit even when the transmitter is held close to the front panel.

Never subject batteries to excessive heat or flame; do not attempt to disassemble them; and be sure they are not short-circuited.

If you will not be using the remote control for a long period of time, remove the batteries and store in a cool, dark place.

If a battery leaks, remove all batteries and dispose of them properly. Thoroughly clean the battery compartment before inserting new batteries.
If the leaking electrolyte comes in contact with skin or clothes, flush with water immediately.

Keep batteries out of reach of children.

Do not use rechargeable-type (nickel-cadmium) batteries.

Do not attempt to recharge alkaline or carbon batteries.

Always remove old, weak, or worn-out batteries and dispose of them properly.

Do not dispose of used batteries in household rubbish.

Operation notes

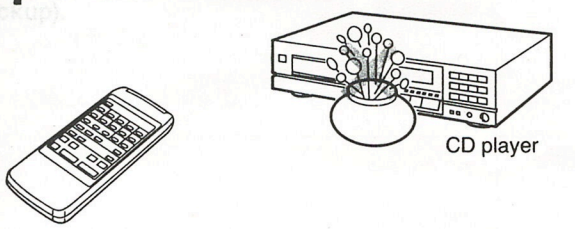

Aim the remote control's transmission window toward the CD player's sensor. Avoid any obstacles.

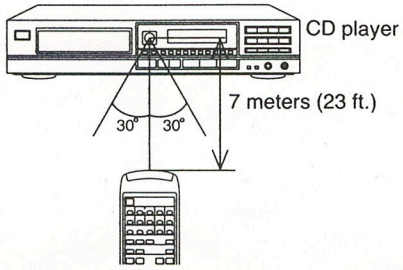

Use the remote control with a 60-degree angle of the CD player. Maximum distance is within 7 meters (23 ft.) directly facing toward the CD player.

Be sure the transmission window and the CD player's sensor are free from dust. Excessive dust might prevent reception.

If direct sunlight or another strong light source strikes the remote control signal sensor part of the CD player, it may impair the remote control's operation. If there is a problem, place the CD player away from the light source.

If this unit is installed in a rack with glass doors, the glass doors' thickness or color might make it necessary to use the remote-control transmitter a shorter distance from the unit.

■ BASIC OPERATION PROCEDURE

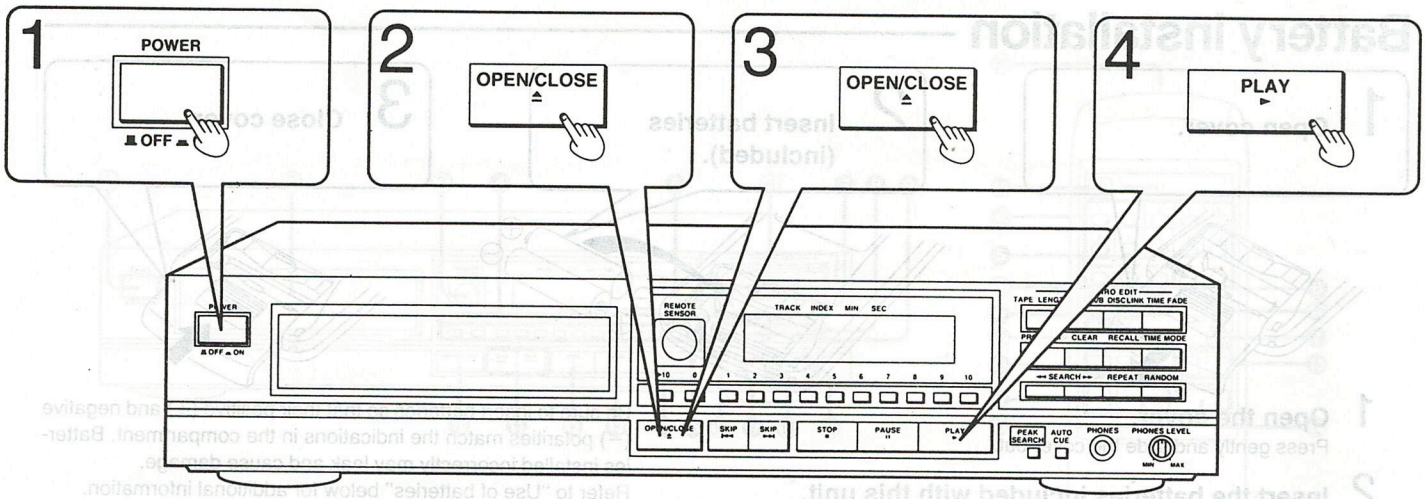

1 Press POWER to switch on the power.

If there is a disc in the disc tray, play will start from the first track.

2 Press ▲ OPEN/CLOSE to open the disc tray and insert a disc.

(Also available from the remote control)

Label must face upward.

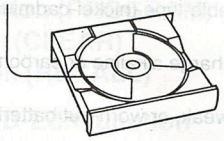

Before attempting to use the remote control transmitter to open the disc tray, make sure that there are no obstructions in front of the unit.

3 Press ▲ OPEN/CLOSE again to close the disc tray.

(Also available from the remote control)

Total number of tracks Total playing time

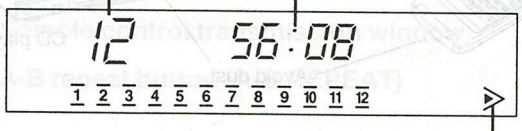

Lights when the total number of tracks exceeds 17

The total playing time displayed includes the silent sections between tracks. For this reason, it may be a few seconds longer than the playing time indicated on the disc.

You can skip this step and press ▶ PLAY. The disc tray will be automatically closed and then play will start from the first track.

4 Press ▶ PLAY.

(Also available from the remote control)

Index number
(For discs without index number, " / " will be continuously displayed.)

Track number in play Elapsed time Play indicator

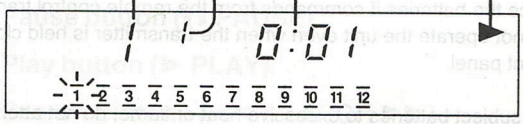

The unit stops automatically when the last track finishes playing.

■ HANDLING PRECAUTIONS FOR TRAVERSE DECK

The laser diode in the traverse deck (optical pickup) may break down due to potential difference caused by static electricity of clothes or human body.
So, be careful of electrostatic breakdown during repair of the traverse deck (optical pickup).

- **Handling of traverse deck (optical pickup)**

1. Do not subject the traverse deck (optical pickup) to static electricity as it is extremely sensitive to electrical shock.
2. To prevent the breakdown of the laser diode, an antistatic shorting pin is inserted into the flexible board (FPC board).
   When removing or connecting the short pin, finish the job in as short time as possible.
3. Take care not to apply excessive stress to the flexible board (FPC board).
4. Do not turn the variable resistor (laser power adjustment). It has already been adjusted.

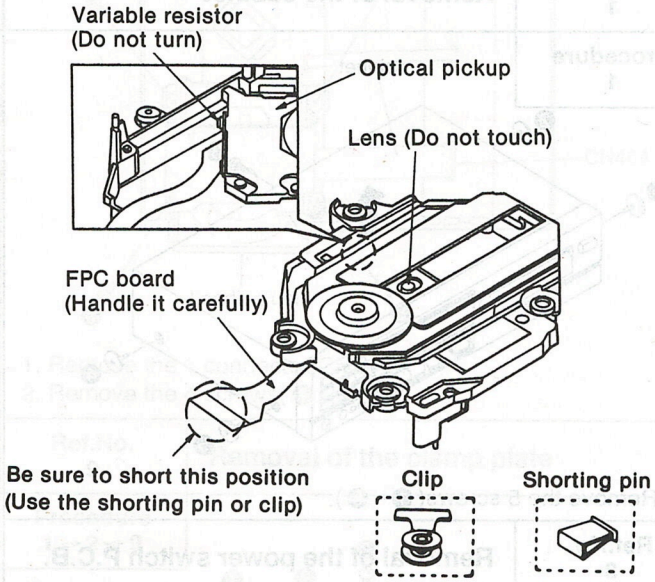

- **Grounding for electrostatic breakdown prevention**

1. Human body grounding
   Use the anti-static wrist strap to discharge the static electricity from your body.
2. Work table grounding
   Put a conductive material (sheet) or steel sheet on the area where the optical pickup is placed, and ground the sheet.

Caution:
The static electricity of your clothes will not be grounded through the wrist strap. So, take care not to let your clothes touch the traverse deck (optical pickup).

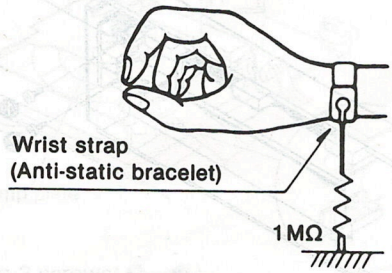

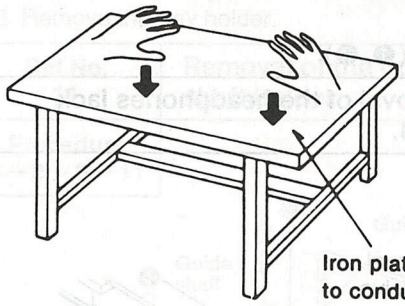

■ DISASSEMBLY INSTRUCTION

Warning: This product uses a laser diode. Refer to caution statements on page 2.

※ This CD player is equipped with FPC board so handle them with care during disassembly and reassembly.

Ref.No. 1	Removal of the cabinet
Procedure 1	

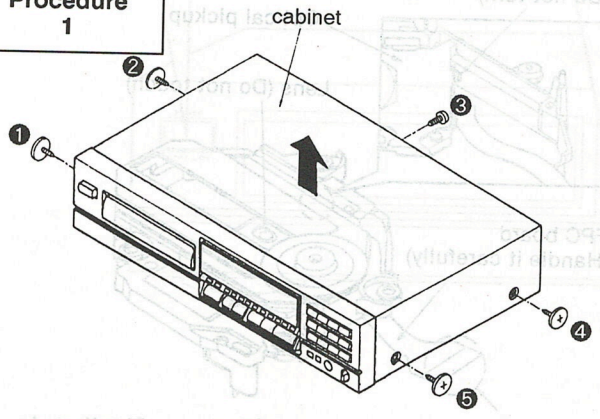

1. Remove the 5 screws(❶~❺).

Ref.No. 2	Removal of the front panel ass'y
Procedure 1→2	

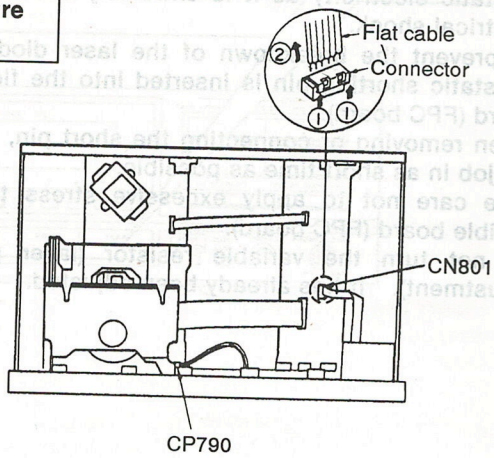

1. Remove the 1 flat cable(CN801).
2. Remove the 1 connector(CP790).

Ref.No. 3	Removal of the power switch P.C.B.
Procedure 1→2→3	

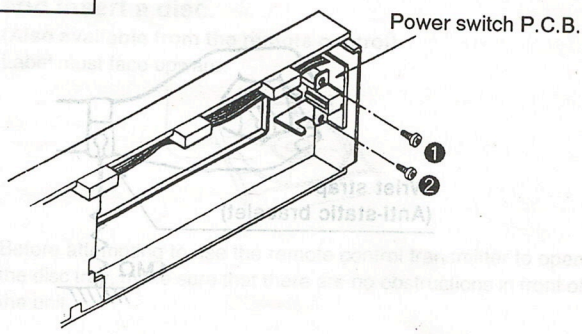

• Remove the 2 screws(❶, ❷).

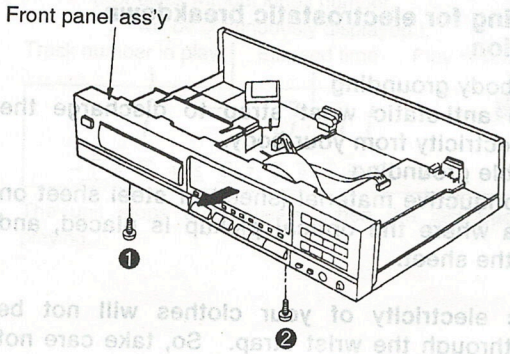

3. Remove the 2 screws(❶, ❷).
4. Remove the front panel ass'y in the direction of arrow.

Ref.No. 4	Removal of the headphones jack P.C.B.
Procedure 1→2→4	

※ Pull out the phones level knob with using adhesive tape when removing the knob.

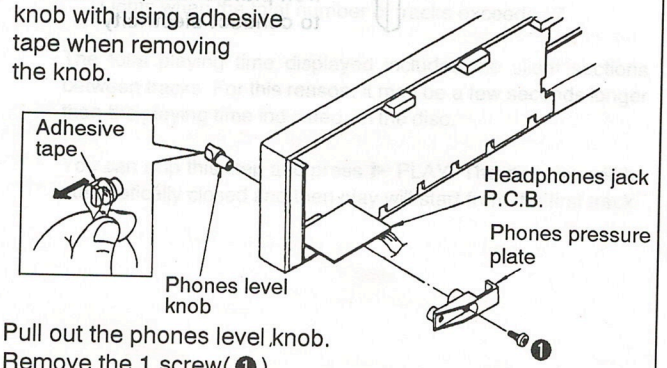

1. Pull out the phones level knob.
2. Remove the 1 screw(❶).
3. Remove the phones pressure plate.

Ref.No. 5	Removal of the FL/operation P.C.B.
Procedure 1→2→5	

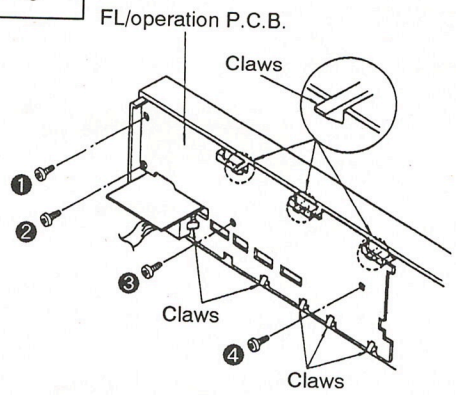

1. Remove the 4 screws(❶~❹).
2. Release the 8 claws.

Ref.No. 6	Removal of the main P.C.B.
Procedure 1→2→6	

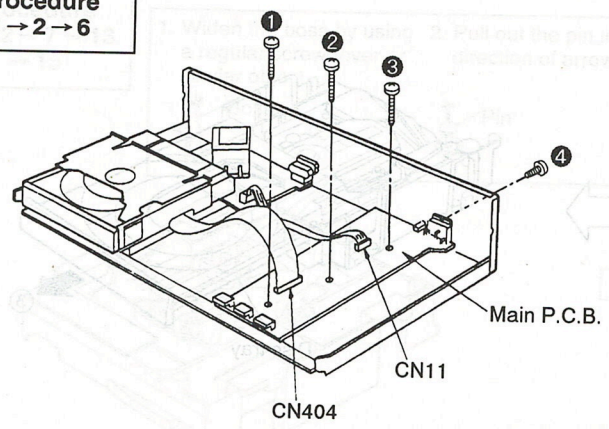

1. Remove the 1 flat cable(CN11).
2. Remove the 1 connector(CN404).
3. Remove the 4 screws(❶~❹).

Ref.No. 7	Removal of the loading unit
Procedure 1→2→7	

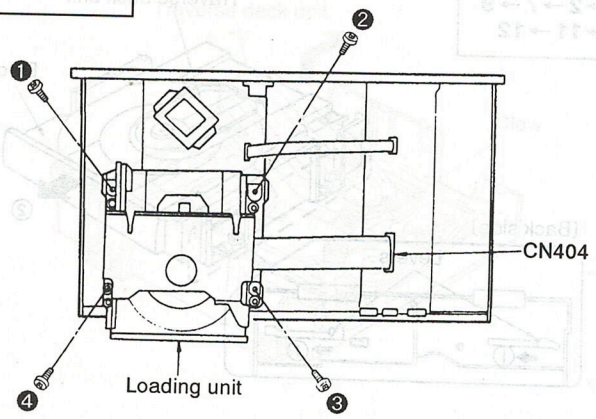

1. Remove the 1 connector(CN404).
2. Remove the 4 screws(❶~❹).

Ref.No. 8	Removal of the power supply P.C.B.
Procedure 1→2→7→8	

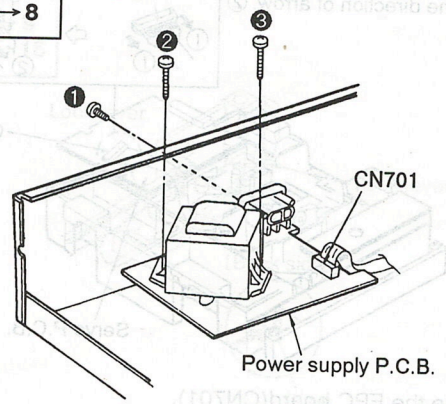

1. Remove the 1 flat cable(CN701).
2. Remove the 3 screws(❶~❸).

Ref.No. 9	Removal of the clamp plate
Procedure 1→2→9	

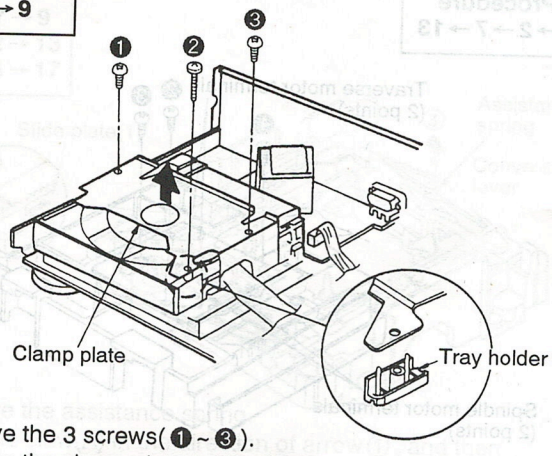

1. Remove the 3 screws(❶~❸).
2. Remove the clamp plate in the direction of arrow.
3. Remove the tray holder.

Ref.No. 10	Removal of the fixed plate,magnet and magnet holder ass'y
Procedure 1→2→9→10	

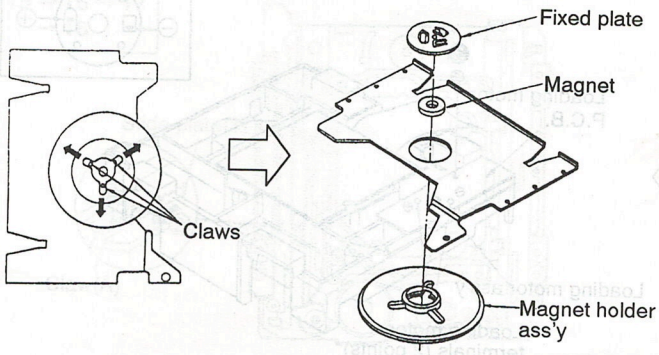

- Release the 3 claws.

Ref.No. 11	Removal of the guide shaft and guide shaft holder
Procedure 1→2→9→11	

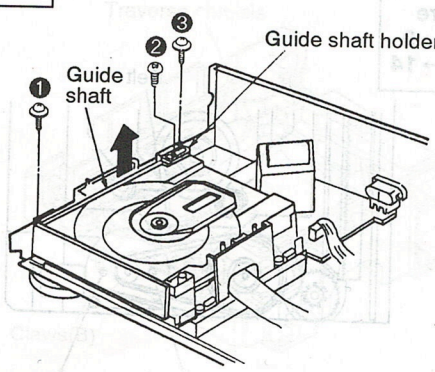

1. Remove the 3 screws(❶~❸).
2. Remove the guide shaft and guide shaft holder in the direction of arrow.

Ref.No. 12	Removal of the disc tray

Procedure 1→2→7→9→11→12

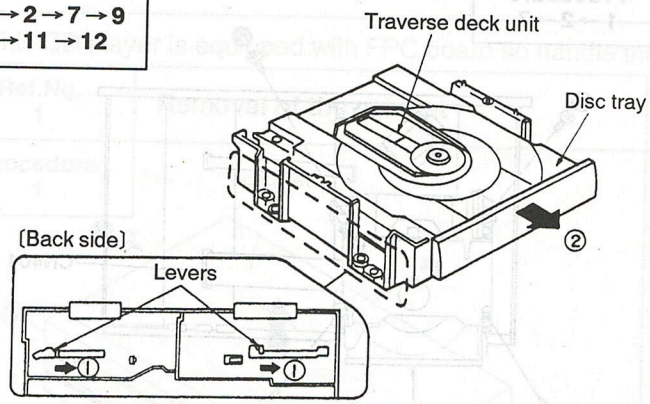

1. Push the 2 levers in the direction of arrow ① until the traverse deck unit goes down and the disc tray slightly in the direction of arrow ②.

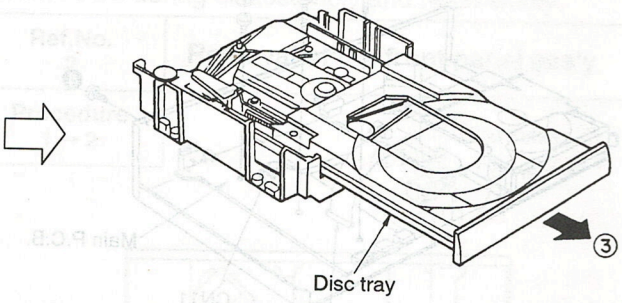

2. Remove the disc tray in the direction of arrow ③.

Ref.No. 13	Removal of the servo P.C.B.

Procedure 1→2→7→13

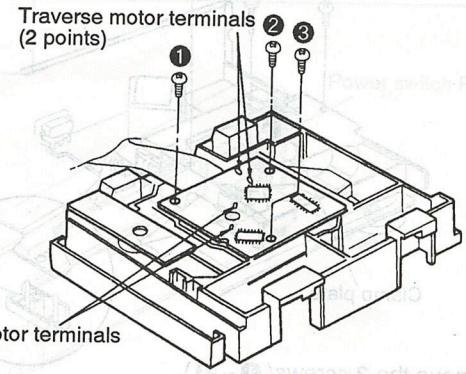

1. Remove the 3 screws(❶~❸).
2. Unsolder the spindle motor terminals(2 points).
3. Unsolder the traverse motor terminals(2 points).

※ Push the top of the connector in the direction of arrow ①, and then pull out the flexible cable in the direction of arrow. ②

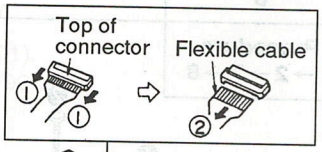

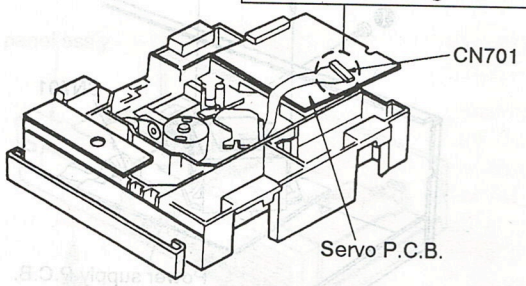

4. Remove the FPC board(CN701).

Note: Insert a shorting pin into the traverse unit flexible cable. (Refer to "handling precautions for traverse deck" on page 7.)

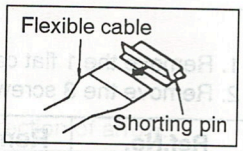

Ref.No. 14	Removal of the loading motor P.C.B. and loading motor ass'y

Procedure 1→2→7→9→11→12→14

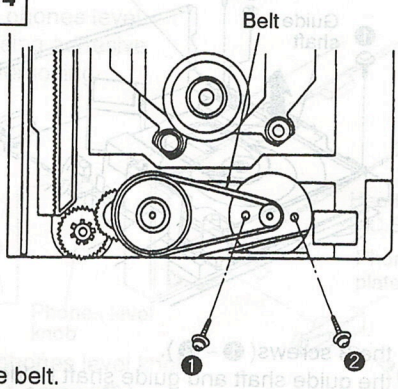

1. Remove the belt.
2. Remove the 2 screws(❶, ❷).

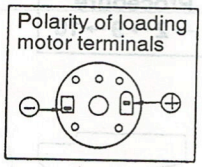

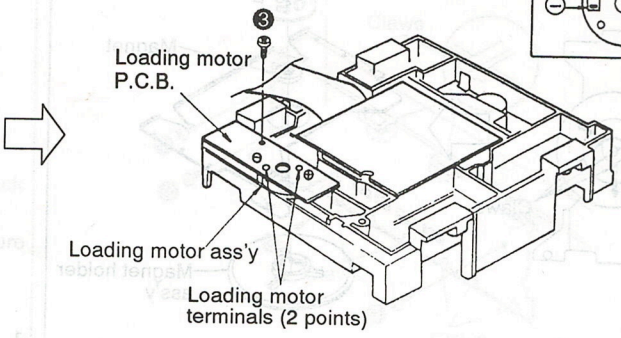

3. Remove the 1 screw(❸).
4. Unsolder the loading motor terminals(2 points).

Ref.No. 15	Removal of the traverse deck unit
Procedure 1→2→7→13→15	

1. Widen the boss by using a regular screwdriver or similar object.
2. Pull out the pin in the direction of arrow.

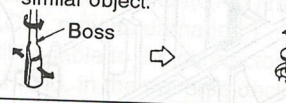

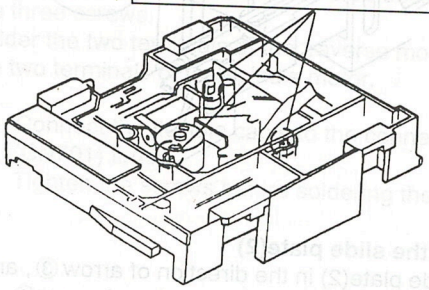

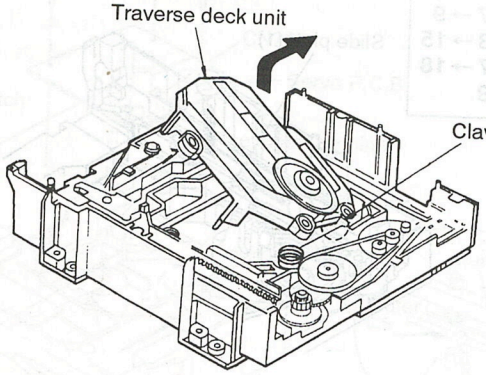

1. Remove the 3 pins.
2. Release the claw and then remove the traverse deck unit in the direction of arrow.

Ref.No. 16	Removal of the lock lever
Procedure 1→2→7→9→11→12→16	

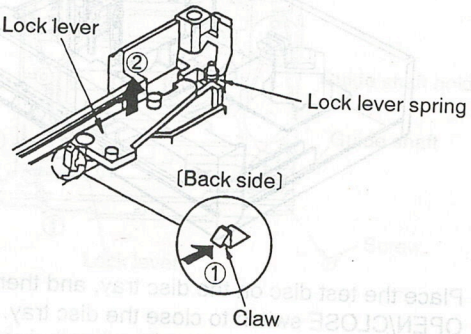

1. Remove the lock lever spring.
2. Release the claw in the direction of arrow ①, and then remove the lock lever in the direction of arrow ②.

Ref.No. 17	Removal of the conversion lever
Procedure 1→2→7→9→11→12→13→15→16→17	

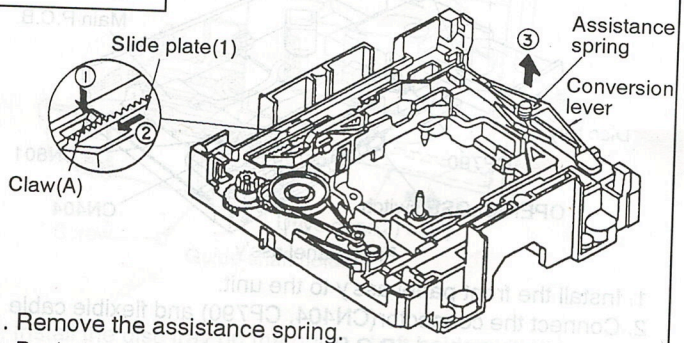

1. Remove the assistance spring.
2. Push the claw(A) in the direction of arrow ①, and then move the slide plate(1) in the direction of arrow ②.
3. Remove the conversion lever in the direction of arrow ③.

Ref.No. 18	Removal of the traverse chassis
Procedure 1→2→7→9→11→12→13→15→16→17→18	

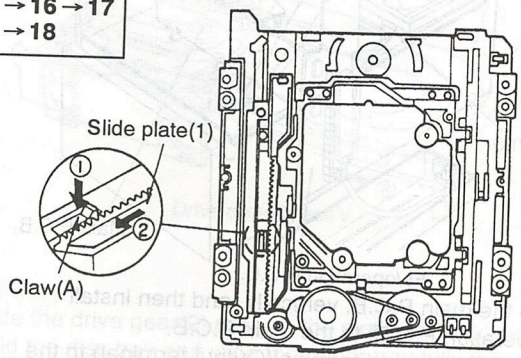

1. Push the claw(A) in the direction of arrow ①, and then move the slide plate(1) in the direction of arrow ②.

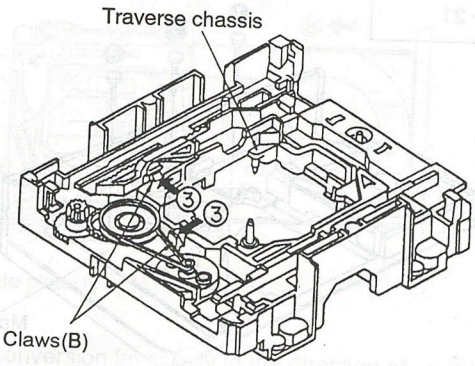

2. Push the 2 claws(B) in the direction of arrow ③, and then remove the traverse chassis.

Ref.No. 19	Removal of the slide plate(1) and slide plate(2)

Procedure
1 → 2 → 7 → 9 → 11 → 13 → 15 → 16 → 17 → 18 → 19

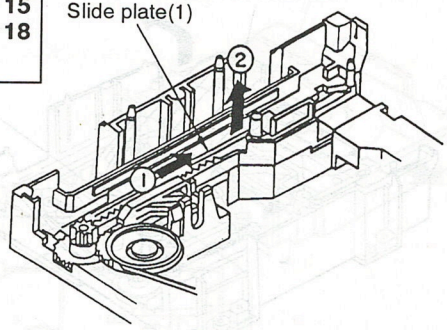

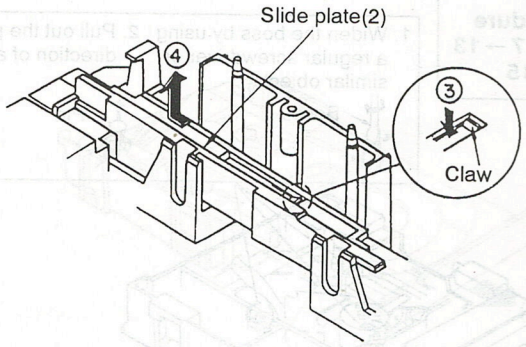

■ Removal of the slide plate(1)
- Move the slide plate(1) in the direction of arrow ①, and remove the slide plate(1) in the direction of arrow ②.

■ Removal of the slide plate(2)
- Move the slide plate(2) in the direction of arrow ③, and remove the slide plate(2) in the direction of arrow ④.

Ref.No. 20	How to check the servo P.C.B.

Procedure
1 → 2 → 7 → 20

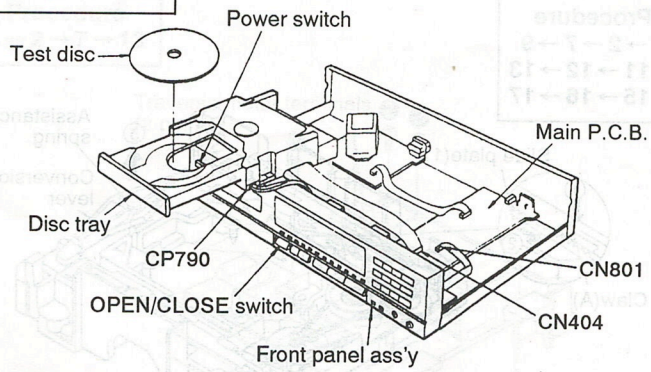

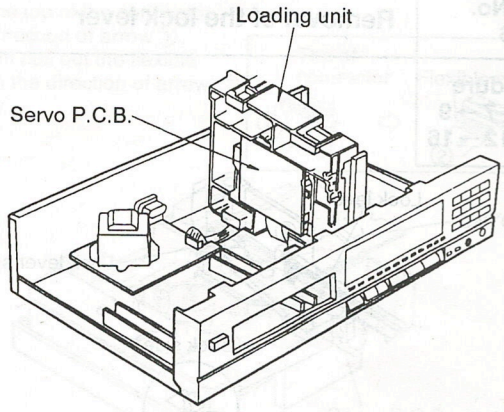

1. Install the front panel ass'y to the unit.
2. Connect the connector(CN404, CP790) and flexible cable (CN801) to the main P.C.B.
3. Turn on the power switch, and then push the OPEN/CLOSE switch to open the disc tray.
4. Place the test disc on the disc tray, and then push OPEN/CLOSE switch to close the disc tray.
5. Place the loading unit sideways as shown above.
6. When checking the solder surface of the servo P.C.B., do as shown above.

Ref.No. 21	How to check the main P.C.B.

Procedure
1 → 2 → 4 → 5 → 21

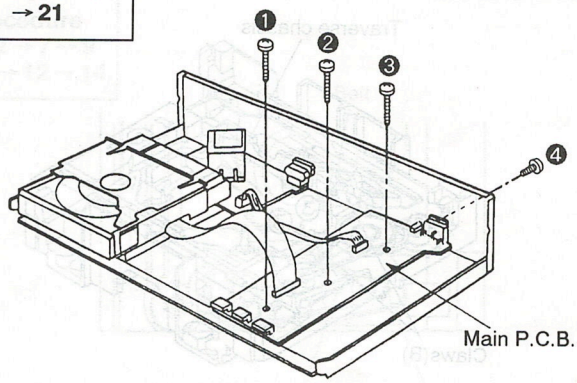

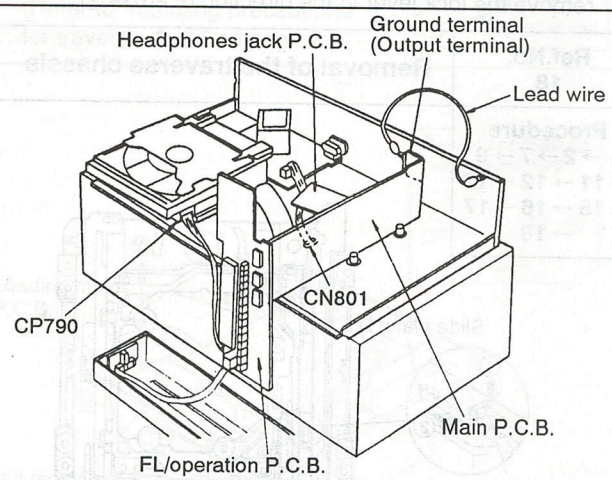

1. Remove the 4 screws(❶~❹).
2. Connect the flexible cable(CN801) of the headhones jack P.C.B.
3. Connect the connector(CP790) of the FL/operation P.C.B.
4. Place the main P.C.B. vertically, and then install FL/operation P.C.B. to the main P.C.B.
5. Connect the ground terminal(Output terminal) to the chassis with lead wire.
6. When checking the soldered surfaces of the main P.C.B. do as shown above.

■ INSTALLING SERVO P.C.B.

1. Before installing the servo P.C.B., move the optical pickup toward the outer edge from the mark " ▲ ". (Otherwise, the rest detect switch(S701) mounted on the servo P.C.B. may be damaged.)
2. Connect the flexible cable to the connector(CN701).
3. Install the servo P.C.B. in the traverse deck unit with the three screws.
4. Solder the two ternimals of the traverse motor and the two terminals of the spindle motor.

Note: Connect the flexible cable to the connector (CN701) firmly.
Tighten the screws before soldering the terminals.

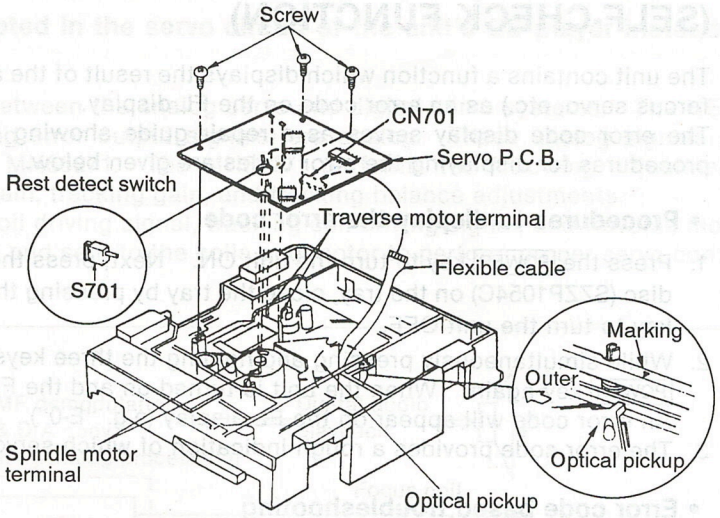

■ INSTALLING DISC TRAY

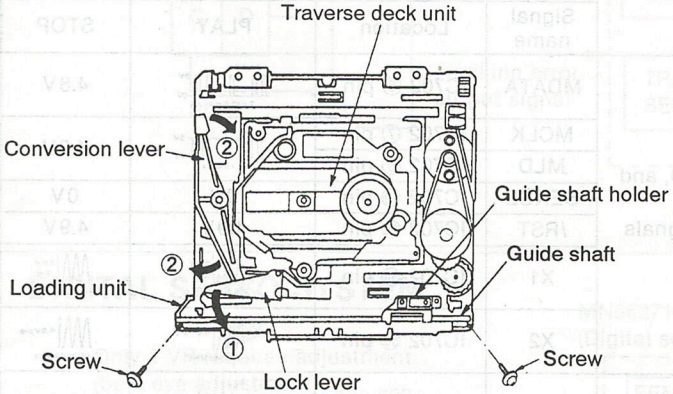

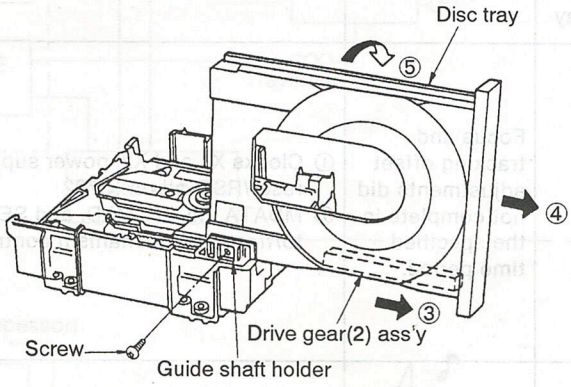

1. Move lock lever in the direction of arrow ① and conversion lever in the direction of arrow ②. (Traverse deck unit rises.)
2. Install the guide shaft on the loading unit.
3. Install the disc tray on the guide shaft holder with the screws as shown above.
4. Slide the drive gear(2) ass'y fully in the direction of arrow ③.
5. Slide the disc tray fully in the direction of arrow ④.
6. Lay the disc tray down in the direction of arrow ⑤.

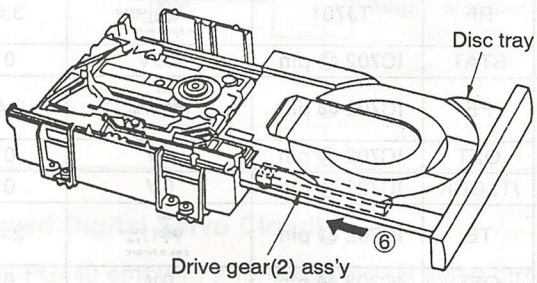

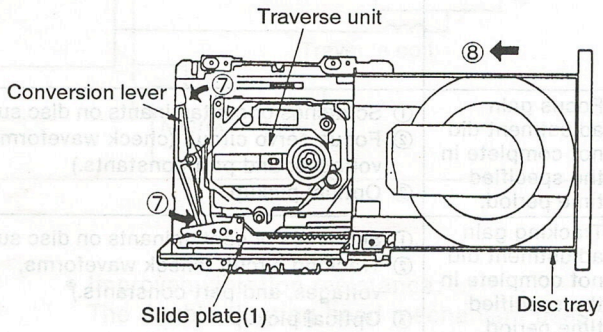

7. Slide the drive gear(2) ass'y in the direction of arrow ⑥.
8. Hold the disc tray and slide the under tray fully the direction of arrow ⑥. (Slide but very little and the drive gear is engaged with drive gear(2) ass'y.)
9. Slide the conversion lever fully in the direction of arrow ⑦, and the drive gear(2) ass'y engages with the slide plate(1). (The traverse deck unit is lowered.)
10. Slide the disc tray in the direction of arrow ⑧.

■ DISPLAY FUNCTION OF AUTOMATICALLY-ADJUSTED RESULTS (SELF-CHECK FUNCTION)

The unit contains a function which displays the result of the automatically adjustment of the servo circuits (tracking, forcus servo, etc.) as an error code on the FL display.
The error code display serves as a repair guide showing the automatically adjustment circuit is at fault. The procedures for displaying the error codes are given below.

• Procedures to display the error code

1. Press the [POWER] key to turn the unit ON. Next, press the [OPEN/CLOSE (▲)] key to open the disc tray, load the test disc (SZZP1054C) on the tray, close the tray by pressing the [OPEN/CLOSE (▲)] key again, and finally press the [POWER] key to turn the unit OFF.
2. While simultaneously pressing and holding the three keys, [TAPE LENGTH], [PROGRAM], and [◀◀ SEARCH (B)], press the [POWER] key again. When the unit is turned on and the FL display is lit up, immediately release the three keys. An error code will appear on the FL display (e.g. "E-0").
3. The error code provides a rough indication of which servo circuit is malfunctioning.

• Error code based troubleshooting

※ The unit is satisfactory if the error code is **E-0** of **E-2**.
※ Before testing, check that the test disc is free of scratches and dirt and optical pickup is clean.

FL error code display	Symptom	Probable cause	Signal to check		Normal the values of voltage and waveform	
			Signal name	Location	PLAY	STOP
E-1	Focus and tracking offset adjustments did not complete in the specified time period.	① Clocks X1 and X2, power supply VDD, and reset/RST, all on IC702 ② MDATA, MCLK, MLD, and SENSE signals to/from the mechanism controller	MDATA	IC702 ⑧ pin		4.8V
			MCLK	IC702 ⑦ pin		4.8V
			MLD	IC702 ⑨ pin		
			SENSE	IC702 ⑩ pin	0V	0V
			/RST	IC702 ⑱ pin	4.9V	4.9V
			X1	IC702 ⑱ pin		
			X2	IC702 ⑲ pin		
E-3 E-5 E-7 E-9 E-B E-D E-F	Disc play unstable	① Scratches or contaminants on disc surface ② Focus and tracking servo circuits (check waveforms, voltages, and part constangs.) ③ Spindle driver circuit ④ Optical pickup	FE	IC702 ㉜ pin		2.4V
			TE	IC702 ㉝ pin		2.4V
			FOD	IC702 ㉘ pin	2.4V	2.4V
			TRD	IC702 ㉗ pin	2.4V	2.4V
			KICK	IC702 ㉖ pin	2.4V	2.4V
			/FLOCK	IC702 ⑪ pin	0V	4.9V
			/RF DET	IC702 ㊳ pin	0V	4.8V
			RF	TJ701		3.4V
			STAT	IC702 ⑰ pin	4.9V	0V
E-4 E-6	Focus gain adjustment did not complete in the specified time period.	① Scratches or contaminants on disc surface ② Focus servo circuit (check waveforms, voltages, and part constants.) ③ Optical pickup	FE	IC702 ㉜ pin		2.4V
			OFT	IC702 ㊱ pin	0V	0V
			/TLOCK	IC702 ⑫ pin	0V	0V
E-8 E-A	Tracking gain adjustment did not complete in the specified time period.	① Scratches or contaminants on disc surface ② Tracking circuit (check waveforms, voltages, and part constants.) ③ Optical pickup	TE	IC702 ㉝ pin		2.4V
			OFT	IC702 ㊱ pin	0V	0V
			/TLOCK	IC702 ⑫ pin	0V	0V
E-C E-E	Perform the same check as for error codes 〈E4, E6〉 and 〈E8, A〉.		FE	IC702 ㉜ pin		2.4V
			TE	IC702 ㉝ pin		2.4V
			OFT	IC702 ㊱ pin	0V	0V
			/TLOCK	IC702 ⑫ pin	0V	0V

■ DIGITAL SERVO SYSTEM

The newly-developed digital servo system is adopted in the servo circuit of the unit's CD player instead of the ordinary analog servo system.

1. The diagrams shown below represent differences between the analog servo and digital servo systems. The HEAD AMP. output signals (i.e., focus error and tracksing error output signals) are analog. These analog signals are converted to the 8-bit digital signals through the MN66271. The MN66271 performs the following adjustments automatically; focus offset, tracking offset, focus gain, tracking gain, and tracking balance adjustments. The outputs from the MN66271 such as the focus coil driving signal, tracking coil driving signal, and traverse motor driving signal are converted to analog signals again and sent to the coils and motor to perform proper servo control for a disc.

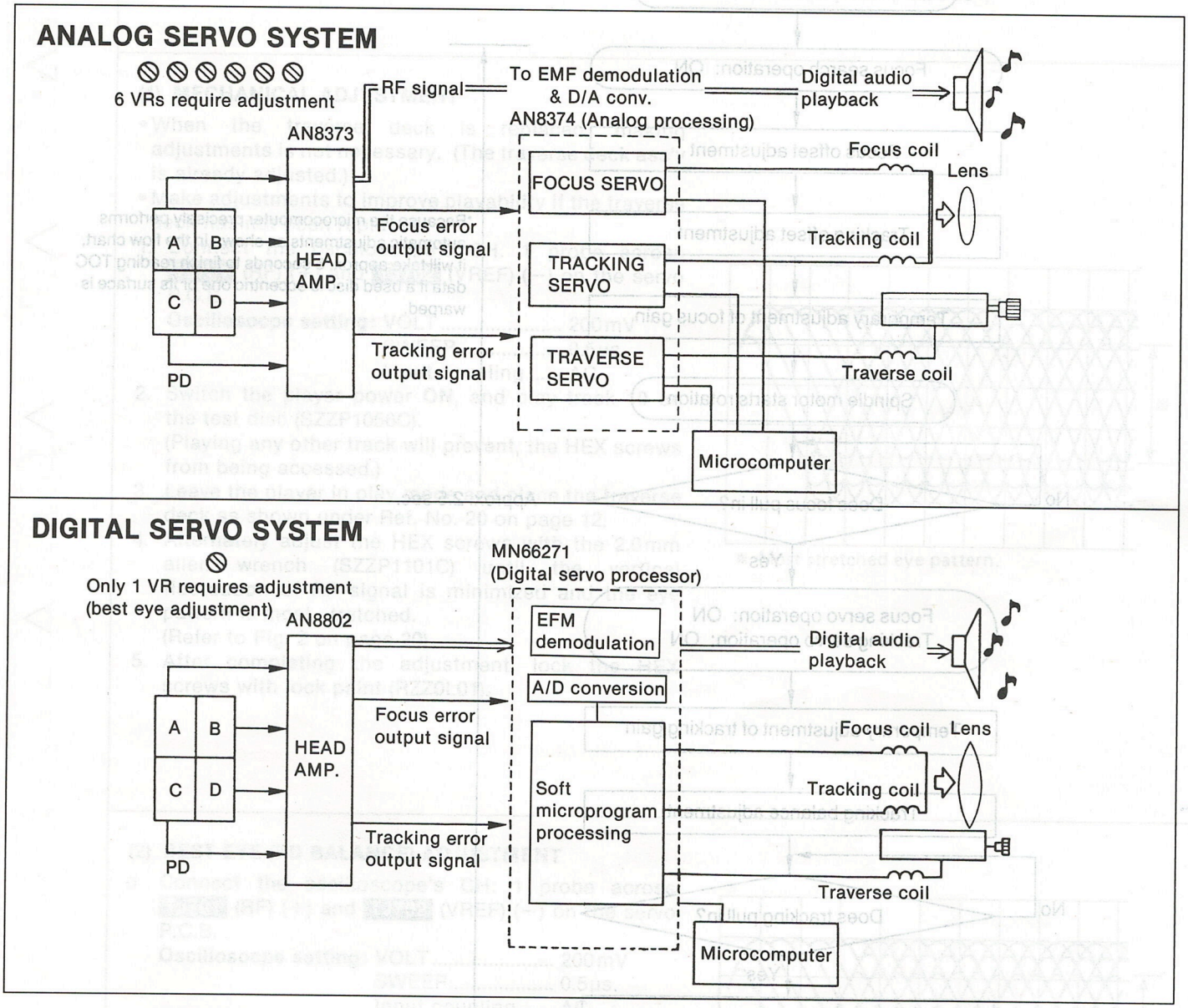

Renewed Digital Servo Circuit

The SL-PG440 employs a renewed digital servo circuit. This new circuit has the following improvements over the former circuit:

- Reduced operation noise:
  A double-stage noise reduction system is employed in the loading mechanism.
- Shortened access time (from 2.9 sec. to 1.9 sec.)
  The traverse gears have been improved.
- Improved vibration resistance:
  The double floating head mechanism uses rubber and spring mountings.
  fo = 50 Hz (former) → 20 Hz (new)
- Reduced component count:
  Three ICs used in the former model were integrated into a single chip.
  Former model: MN6626, MN6650, AN8800
  → New model: MN66271

2. The servo processor IC (MN66271) of the newly-developed digital servo circuit automatically performs the following adjustments which were originally adjusted manually in the conventional analog servo circuit:
(1) Focus offset, (2) Tracking offset, (3) Focus gain, (4) Tracking gain, and (5) Tracking balance. Therefore, you do not have to perform the above-mentioned electrical adjustments. The unit optimizes the servo for each loaded disc.
[You must perform the best eye (PD balance) adjustment manually.]

The following flow chart shows the sequence of automatic adjustments.

• Flow chart on automatic adjustment sequence

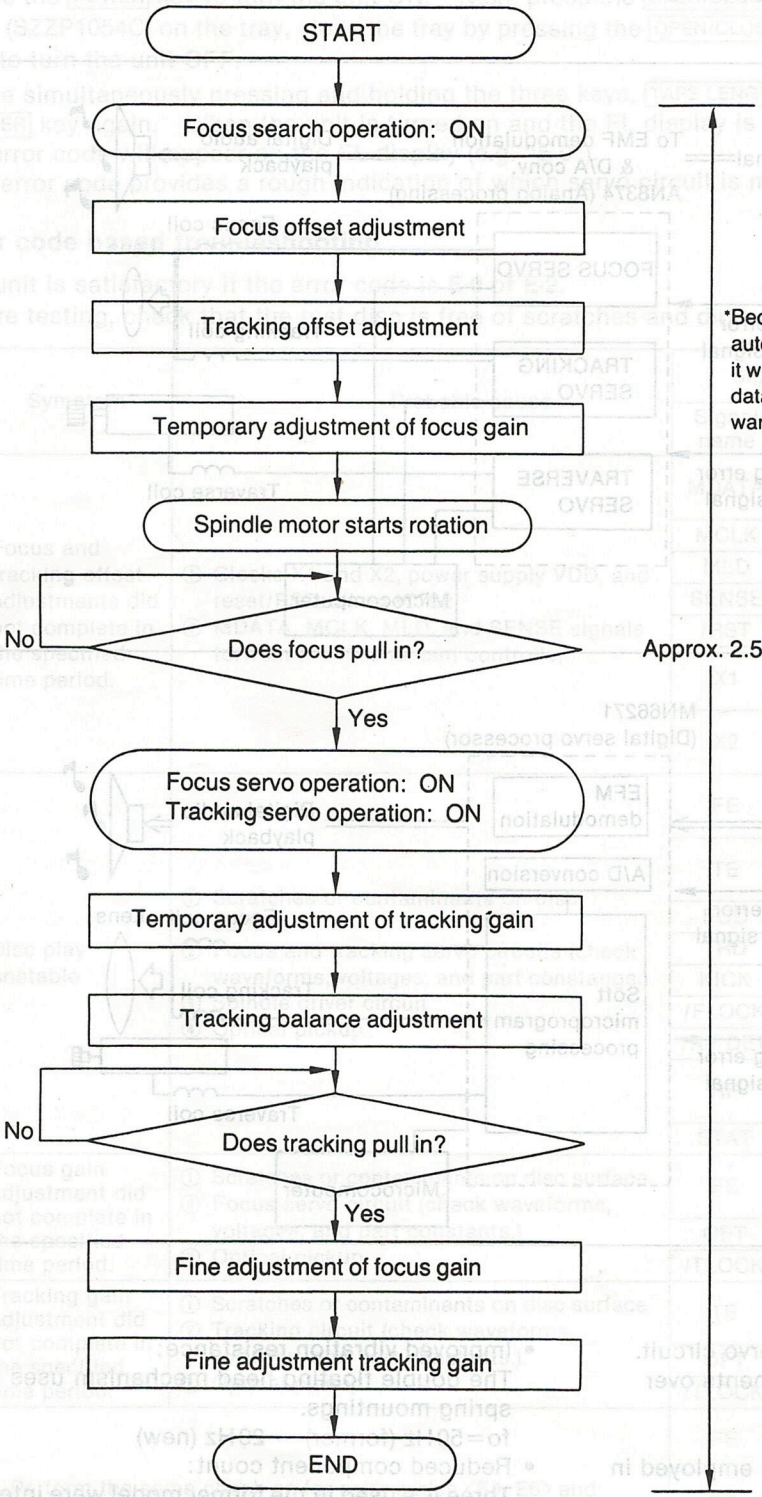

*Because the microcomputer precisely performs automatic adjustments as shown in the flow chart, it will take approx. 5 seconds to finish reading TOC data if a used disc is eccentric one or its surface is warped.

TROUBLESHOOTING GUIDE

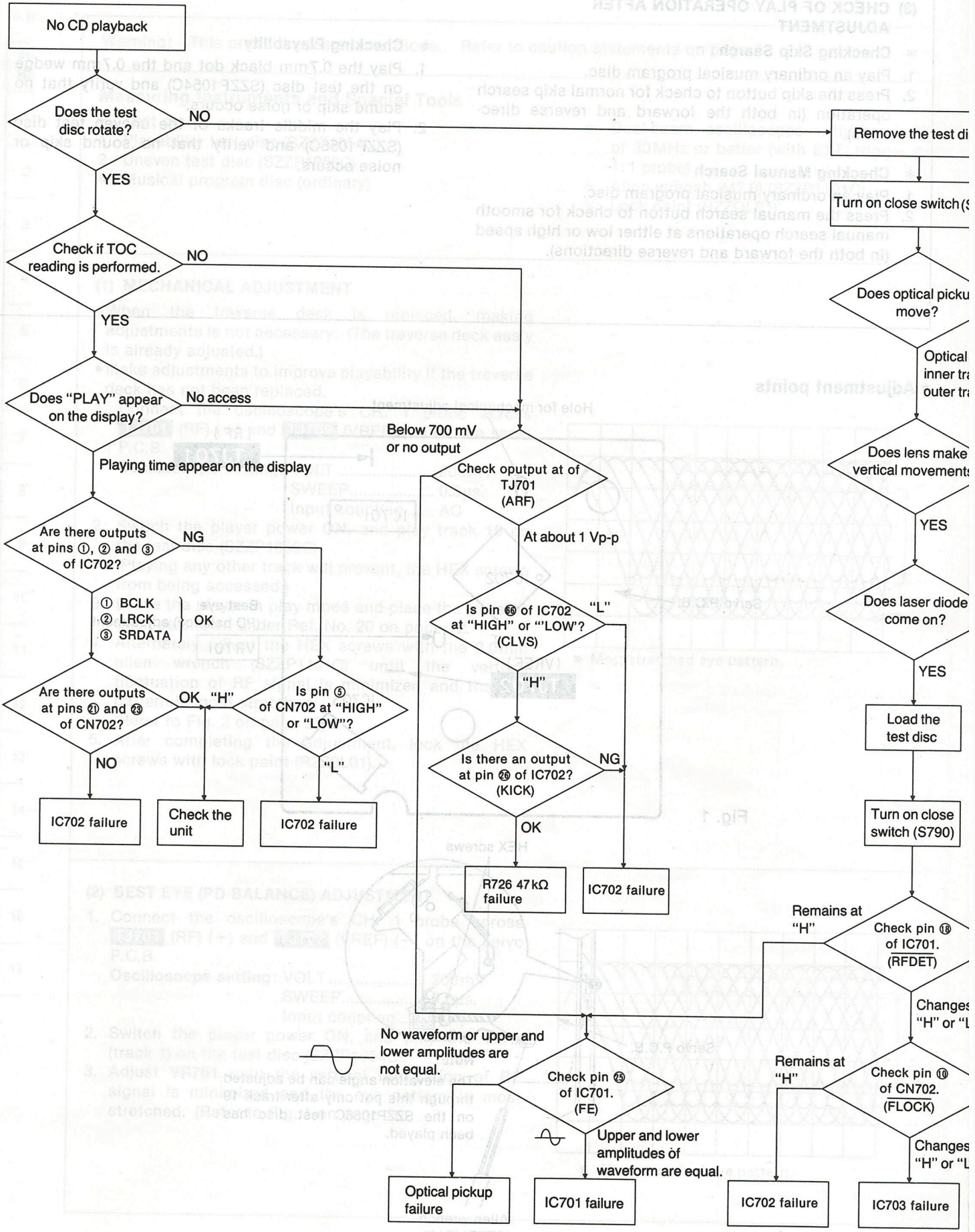

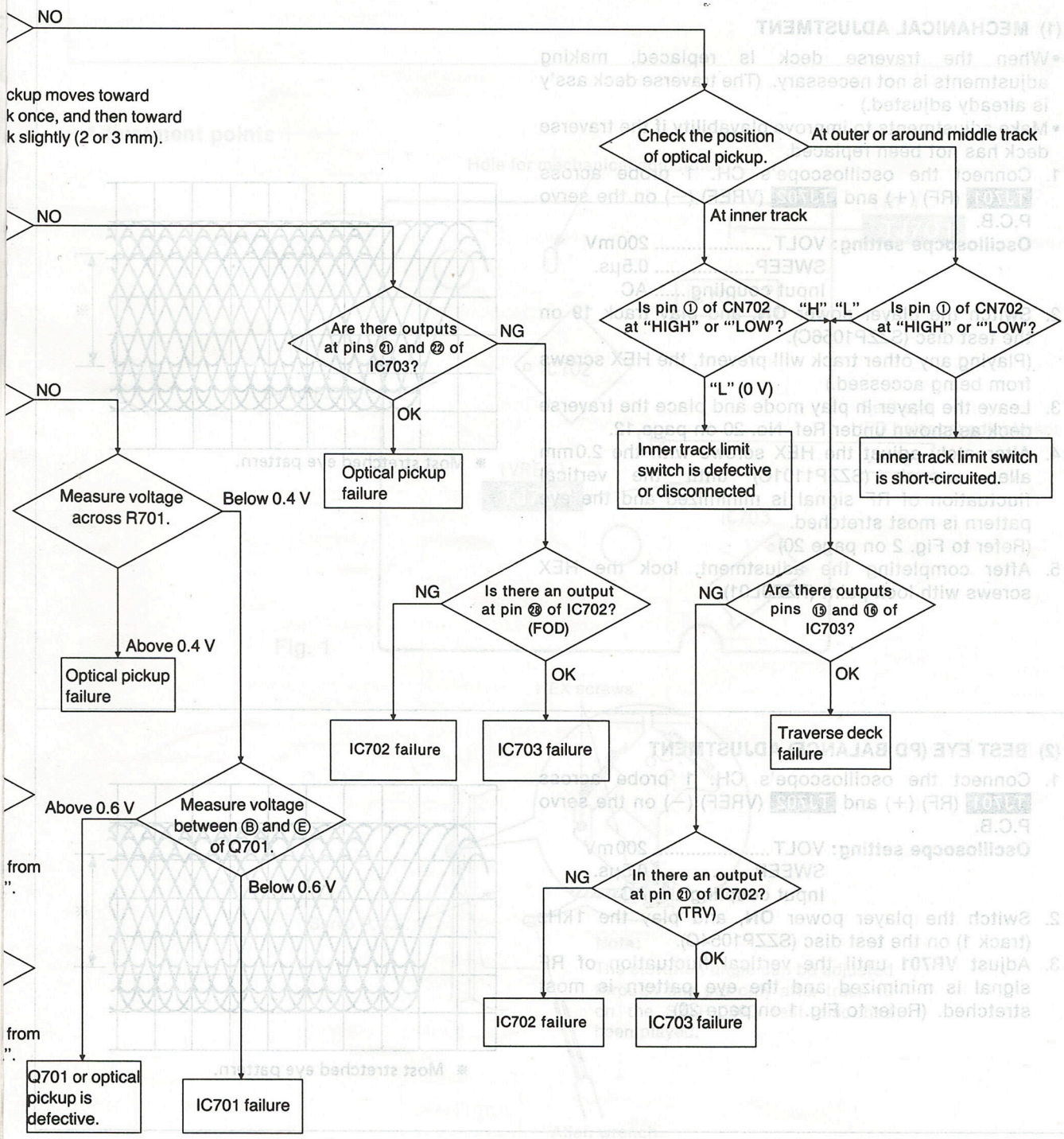
NO
ckup moves toward
k once, and then toward
k slightly (2 or 3 mm).
Check the position of optical pickup.
At outer or around middle track
At inner track
NO
Are there outputs at pins ㉑ and ㉒ of IC703?
NG
OK
Optical pickup failure
Is pin ① of CN702 at "HIGH" or "LOW"?
"H", "L"
Is pin ① of CN702 at "HIGH" or "LOW"?
"L" (0 V)
Inner track limit switch is defective or disconnected
Inner track limit switch is short-circuited.
NO
Measure voltage across R701.
Below 0.4 V
Above 0.4 V
Optical pickup failure
NG
Is there an output at pin ㉘ of IC702? (FOD)
OK
IC702 failure
IC703 failure
NG
Are there outputs pins ⑮ and ⑯ of IC703?
OK
Traverse deck failure
Above 0.6 V
Measure voltage between Ⓑ and Ⓔ of Q701.
Below 0.6 V
from
".
from
".
Q701 or optical pickup is defective.
IC701 failure
NG
In there an output at pin ㉑ of IC702? (TRV)
OK
IC702 failure
IC703 failure

■ MEASUREMENTS AND ADJUSTMENTS

Warning: This product uses a laser diode. Refer to caution statements on page 2.

Measuring Instruments and Special Tools

* Test discs
1. Playability test disc (SZZP1054C)
2. Uneven test disc (SZZP1056C)

* Musical program disc (ordinary)
* Dual-beam oscilloscope with bandwidth of 30MHz or better (with EXT. trigger and 1:1 probe).
* Allen wrench (M2.0) (SZZP1101C)
* Lock paint (RZZOL01)

(1) MECHANICAL ADJUSTMENT

- When the traverse deck is replaced, making adjustments is not necessary. (The traverse deck ass'y is already adjusted.)
- Make adjustments to improve playability if the traverse deck has not been replaced.

1. Connect the oscilloscope's CH. 1 probe across TJ701 (RF) (+) and TJ702 (VREF) (−) on the servo P.C.B.
   Oscillosocpe setting: VOLT 200mV
   SWEEP..... 0.5µs.
   Input coupling ..... AC
2. Switch the player power **ON**, and play track **19** on the test disc (SZZP1056C).
   (Playing any other track will prevent, the HEX screws from being accessed.)
3. Leave the player in play mode and place the traverse deck as shown under Ref. No. 20 on page 12.
4. Alternately adjust the HEX screws with the 2.0mm allen wrench (SZZP1101C) until the vertical fluctuation of RF signal is minimized and the eye pattern is most stretched.
   (Refer to Fig. 2 on page 20)
5. After completing the adjustment, lock the HEX screws with lock paint (RZZ0L01).

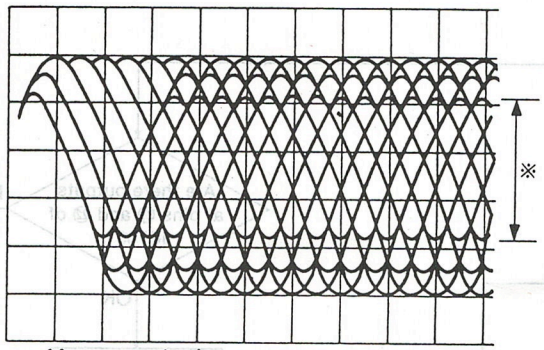

※ Most stretched eye pattern.

(2) BEST EYE (PD BALANCE) ADJUSTMENT

1. Connect the oscilloscope's CH. 1 probe across TJ701 (RF) (+) and TJ702 (VREF) (−) on the servo P.C.B.
   Oscillosocpe setting: VOLT 200mV
   SWEEP..... 0.5µs.
   Input coupling ..... AC
2. Switch the player power **ON**, and play the 1kHz (track 1) on the test disc (SZZP1054C).
3. Adjust **VR701** until the vertical fluctuation of RF signal is minimized and the eye pattern is most stretched. (Refer to Fig. 1 on page 20)

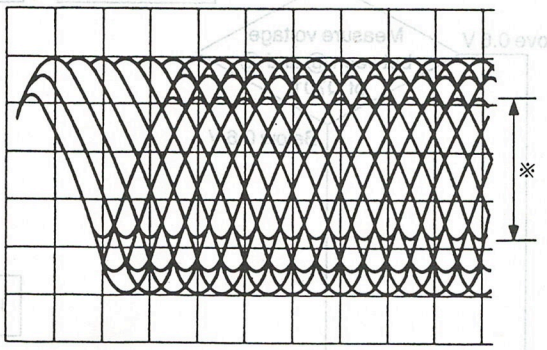

※ Most stretched eye pattern.

(3) CHECK OF PLAY OPERATION AFTER ADJUSTMENT

* **Checking Skip Search**

1. Play an ordinary musical program disc.
2. Press the skip button to check for normal skip search operation (in both the forward and reverse directions).

* **Checking Manual Search**

1. Play an ordinary musical program disc.
2. Press the manual search button to check for smooth manual search operations at either low or high speed (in both the forward and reverse directions).

* **Checking Playability**

1. Play the 0.7mm black dot and the 0.7mm wedge on the test disc (SZZP1054C) and verify that no sound skip or noise occurs.
2. Play the middle tracks of the uneven test disc (SZZP1056C) and verify that no sound skip or noise occurs.

• Adjustment points

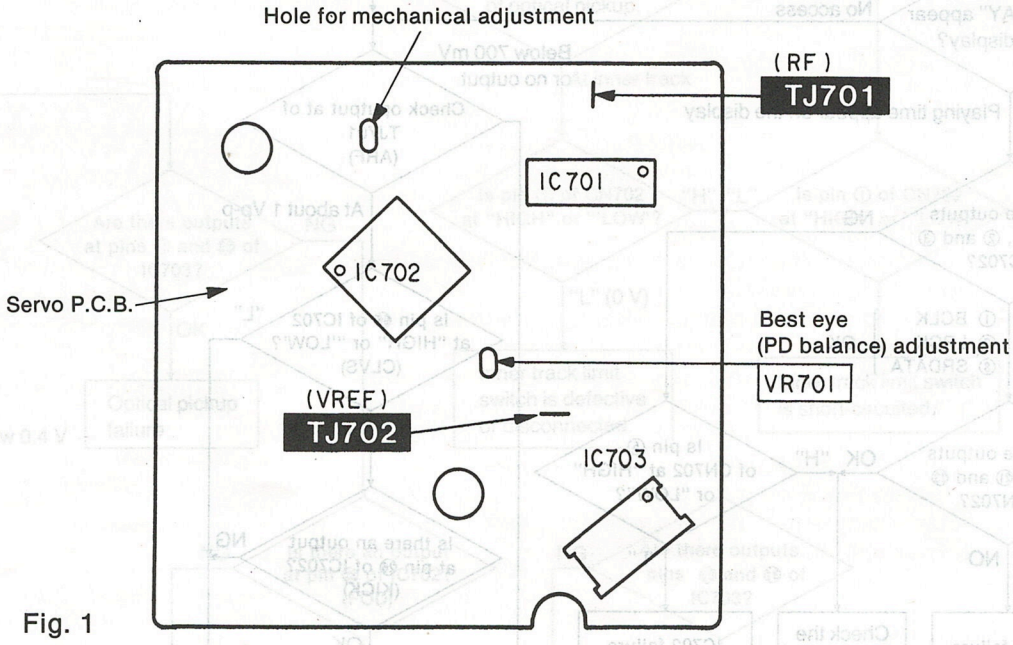

Fig. 1

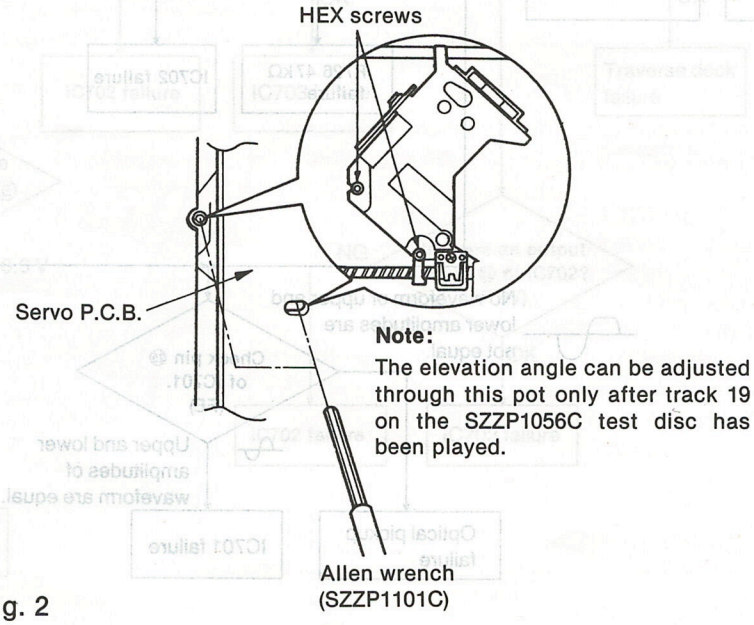
HEX screws
Servo P.C.B.
Note:
The elevation angle can be adjusted through this pot only after track 19 on the SZZP1056C test disc has been played.
Allen wrench
(SZZP1101C)

Fig. 2

■ TERMINAL FUNCTION OF IC'S

• IC601 (MN187164PKZ1): System control & FL drive

Pin No.	Mark	I/O Division	Function
1	V_{DD}	I	Power supply terminal
2	OSC2	I	Clock input terminal (4.2336 MHz)
3	OSC1	O	
4	V_{SS}	—	GND terminal
5	XI	—	(Not used, connected to GND)
6	XO	—	(Not used, open)
7	P27 (OPEN)	O	Loading motor "open" command signal
8	P26 (CLOSE)	O	Loading motor "close" command signal
9	P25 (OPEN SW)	I	Disc holder "open" detection
10	P24 (CLOSE SW)	I	Disc holder "close" detection
11	P23 (REST SW)	I	Rest position detection signal
12	P22	—	(Not used, open)
13	P21 (SYNC. R)	O	Synchro record control signal
14	P20 (REC. E)	I	
15	P15 (REMOCON)	I	Remote control signal
16	P14 (SENSE)	I	Optical servo condition (track cross) input
17	P13 (FLOCK)	I	Optical servo condition (focus) input
18	P12 (TLOCK)	I	Optical servo condition (tracking) input
19	P11 (D MUTE)	O	Muting output
20	P10 (STAT)	I	Status signal (CRC, CUE, CLVS, TTSTOP, FCLV, SQOK)
21	P7 (RST)	I	Reset signal input
22	P5 (MCLK)	O	Command clock signal
23	P4 (MLD)	O	Command load signal ("L": LOAD)
24	P3 (MDATA)	O	Command data signal
25	P2 (SQCK)	O	Sub-code Q register clock
26	P1 (SUBQ)	I	Sub-code Q data
27	P0 (BLKCK)	I	Sub-code block clock (f=75 Hz)
28	SYNC	—	(Not used, open)
29	CM	—	(Not used, connected to GND)
30 ∫ 37	P47 ∫ P40	I	Key return signal
38 ∫ 47	D9 ∫ D0	O	FL digit signal
48 ∫ 63	S15 ∫ S0	O	FL segment signal and key scan signal
64	V_{PP}	I	Power supply terminal of FL display

• IC702 (MN66271RA): Digital servo processor/digital signal processor/digital filter/D/A converter

Pin No.	Mark	I/O Division	Function
1	BCLK	O	Serial bit clock terminal
2	LRCK	O	L/R discriminating signal
3	SRDATA	O	Serial data (Not used, open)
4	$DV_{DD}1$	I	Power supply (digital circuit) terminal
5	$DV_{SS}1$	—	GND (digital circuit) terminal
6	TX	O	Digital audio interface signal
7	MCLK	I	Command clock signal
8	MDATA	I	Command data signal
9	MLD	I	Command load signal ("L": LOAD)
10	SENSE	O	Sense signal (OFT, FESL, NACEND, NAJEND, POSAD, SFG)
11	/FLOCK	O	Optical servo condition (focus) ("L": lead-in)
12	/TLOCK	O	Optical servo condition (tracking) ("L": lead-in)
13	BLKCK	O	Sub-code block clock (f=75Hz)
14	SQCK	I	Sub-code Q register clock
15	SUBQ	O	Sub-code Q data
16	DMUTE	I	Muting input ("H": MUTE)
17	STAT	O	Status signal (CRC, CUE, CLVS, TTSTOP, FCLV, SQCK)
18	/RST	I	Reset signal ("L": reset)
19	SMCK	O	System clock (f=4.2336MHz)
20	PMCK	O	Frequency division clock signal (Not used, open) ($f=\frac{1}{1.92}\times ck=88.2kHz$)
21	TRV	O	Traverse servo control
22	TVD	O	Traverse drive signal
23	PC	O	Turntable motor drive signal ("L": ON)
24	ECM	O	Turntable motor drive signal (Forced mode)
25	ECS	O	Turntable motor drive signal (Servo error signal)
26	KICK	O	Kick pulse output
27	TRD	O	Tracking drive signal output
28	FOD	O	Focus drive signal output
29	VREF	I	D/A drive output (TVD, ECS, TRD, FOD, FBAL, TBAL) normal voltage input terminal
30	FBAL	O	Focus balance adj. output
31	TBAL	O	Tracking balance adj. output
32	FE	I	Focus error signal (analog input)
33	TE	I	Tracking error signal (analog input)
34	RFENV	I	RF envelope signal
35	VDET	I	Oscillation det. signal ("H": det.)
36	OFT	I	Off frack signal ("H": Off track)
37	TRCRS	I	Track cross signal input
38	/RFDET	I	RF detection signal ("L": detection)
39	BDO	I	Dropout detection signal ("H": dropout)
40	LDON	O	Laser power control ("H": ON)
41	TES	O	Tracking error shunt output ("H": dropout)
42	PLAY	O	Play signal ("H": play)

Pin No.	Mark	I/O Division	Function
43	WVEL	O	Double velocity status signal ("H": double)
44	ARF	I	RF signal input
45	IREF	I	Reference current input
46	DRF	I	DSL bias terminal (Not used, open)
47	DSLF	I/O	DSL loop filter terminal
48	PLLF	I/O	PLL loop filter terminal
49	VCOF	I/O	VCO loop filter terminal (Not used, open)
50	$AV_{DD}2$	I	Power supply (analog circuit) terminal (2)
51	$AV_{SS}2$	—	GND (analog circuit) terminal
52	EFM	O	EFM signal (Not used, open)
53	PCK	O	PLL extract clock (f=4.3218MHz)
54	PDO	O	Phase comparated signal of EFM and PCK (Not used, open)
55	SUBC	O	Sub-code serial output data (Not used, open)
56	SBCK	I	Sub-code serial output clock (Not used, open)
57	V_{SS}	—	GND terminal
58	X1	I	Crystal oscillator terminal (f=16.9344MHz)
59	X2	O	
60	V_{DD}	I	Power supply terminal
61	BYTCK	O	Byte clock signal
62	/CLDCK	O	Sub-code frame clock signal (f CLDCK=7.35kHz: Normal) (Not used, open)

Pin No.	Mark	I/O Division	Function
63	FCLK	O	Crystal frame clock (Not used, open)
64	IPFLAG	O	Interpolation flag terminal
65	FLAG	O	Flag terminal
66	CLVS	O	Turntable servo phase synchro signal ("H": CLV, "L": Rough servo)
67	CRC	O	Sub-code CRC check terminal ("H": OK, "L": NG)
68	DEMPH	O	De-emphasis ON signal ("H": ON)
69	RESY	O	Re-synchronizing signal of frame sync. (Not used, open)
70	/RST2	I	Reset terminal after "MASH" circuit
71	/TEST	I	Test terminal (Normal: "H")
72	$AV_{DD}1$	I	Power supply (analog circuit) terminal (1)
73	OUTL	O	
74	$AV_{SS}1$	—	GND (analog circuit) terminal (1)
75	OUTR	O	Rch audio signal
76	RSEL	I	Polarity direction control terminal of RF signal
77	CSEL	I	Frequency control terminal of crystal oscillator
78	PSEL	I	Test terminal (Normal: "L")
79	MSEL	I	"SMCK" terminal frequency select ("L": SMCK=4.2336MHz)
80	SSEL	I	"SUBQ" terminal mode select ("H": Q code buffer)

• IC701 (AN8802SCE1V): Servo amp

Pin No.	Mark	I/O Division	Function
1	PDAD	I	Photo detector Bch input without delay
2	PDA	I	Photo detector Ach input without delay
3	LPD	I	Laser PD signal
4	LD	O	Laser power auto control output
5	AMPI	I	RF amp terminal
6	V_{CC}	I	Power supply terminal
7	AMPO	O	RF amp signal
8	CAGC	I	AGC detection capacitor input
9	ARF	O	RF signal
10	CENV	I	RF detect capacitor connection terminal
11	CEA	I	HPF-AMP capacitor connection terminal
12	GND	—	GND terminal
13	LDON	I	LD APC ON/OFF ("H": ON, "L": OFF)
14	TES	I	Tracking error shunt input ("H": shunt)
15	PLAY	I	Play signal ("H": ON, "L": OFF)
16	WVEL	I	Double velocity ("H": double, "L": single)

Pin No.	Mark	I/O Division	Function
17	BDO	O	Dropout detection control
18	/RFDET	O	RF det. signal ("L": det.)
19	CROSS	O	Tracking error zero cross output
20	OFTR	O	Off track detection ("H": det.)
21	VDET	O	Oscillation det. signal ("H": det.)
22	ENV	O	Envelope output terminal
23	TEBPF	I	Oscillation detect input terminal
24	TE	O	Tracking error signal
25	FE	O	Focusing error signal
26	PTO	O	Potention amp output
27	PTI	I	Potention amp input
28	TBAL	I	Tracking balance adj. input
29	FBAL	I	Focus balance adj. input
30	VREF	O	Reference voltage output
31	PDB	I	Photo detector Ach input with delay
32	PDBD	I	Photo detector Bch input with delay

• IC703 (AN8389SE1): Focus coil/tracking coil/traverse motor/spindle motor drive

Pin No.	Mark	I/O Division	Function
1	V_{CC}	I	Power supply terminal
2	VREF	I	Reference voltage input
3	IN4	I	Motor driver (4) input
4	IN3	I	Motor driver (3) input
5	GND	—	GND terminal
6	NC	—	No connection
7	NRESET	I	Reset terminal
8	GND	—	GND terminal
9	IN2	I	Motor driver (2) input
10	PC2	I	PC2 (power cut) input
11	IN1	I	Motor driver (1) input
12	PC1	I	PC1 (power cut) input (Not used, open)

Pin No.	Mark	I/O Division	Function
13	$PV_{CC}1$	I	Driver power supply (1)
14	PGND1	—	Driver GND terminal (1)
15	D1−	O	Motor driver (1) output terminal (−)
16	D1+	O	Motor driver (1) output terminal (+)
17	D2−	O	Motor driver (2) output terminal (−)
18	D2+	O	Motor driver (2) output terminal (+)
19	D3−	O	Motor driver (3) output terminal (−)
20	D3+	O	Motor driver (3) output terminal (+)
21	D4−	O	Motor driver (4) output terminal (−)
22	D4+	O	Motor driver (4) output terminal (+)
23	PGND2	—	Driver GND terminal (2)
24	$PV_{CC}2$	I	Driver power supply (2)

■ BLOCK DIAGRAM

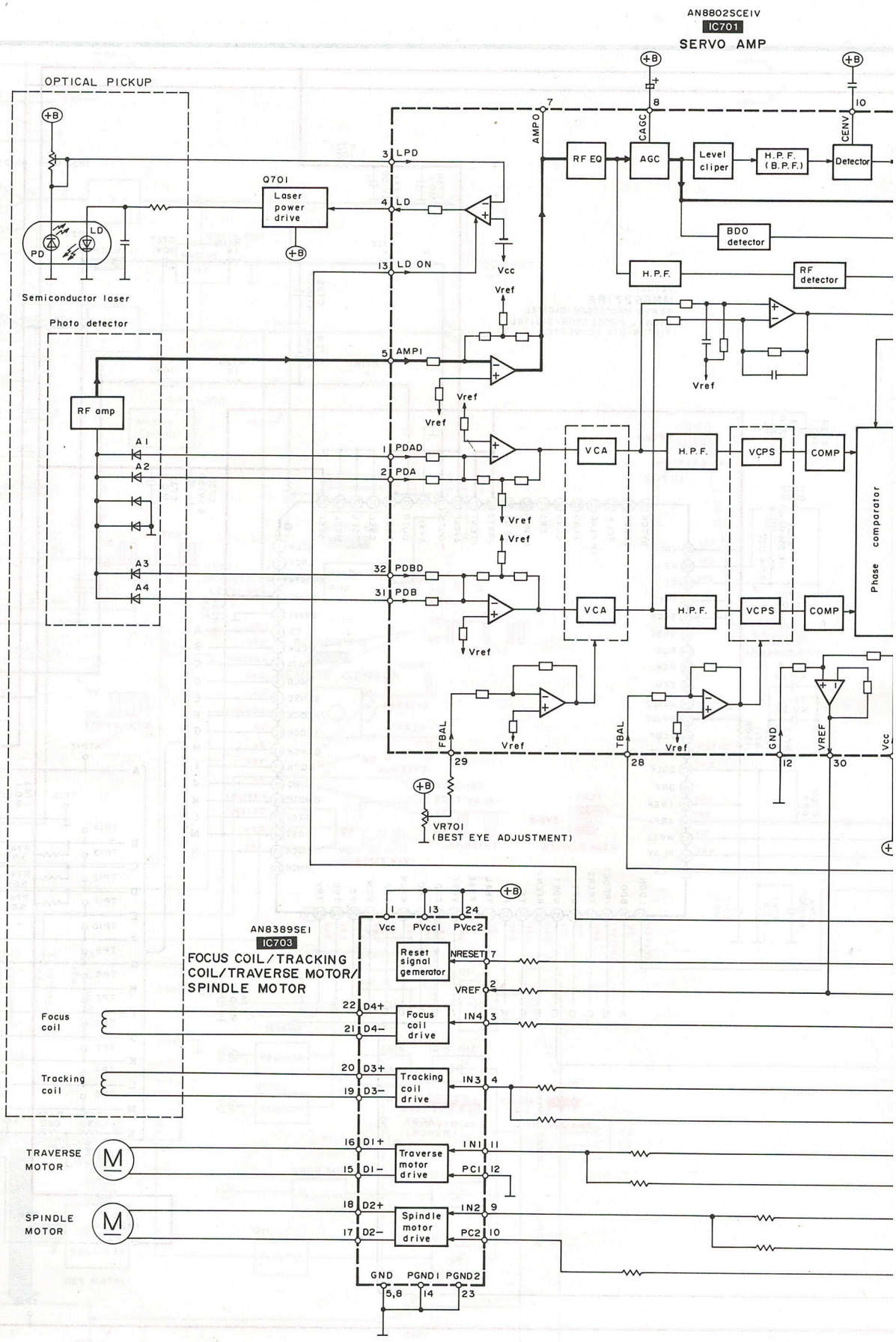

MN6627IRA

IC702

SERVO PROCESSOR/DIGITAL SIGI
DIGITAL FILTER/D/A CONVERTE

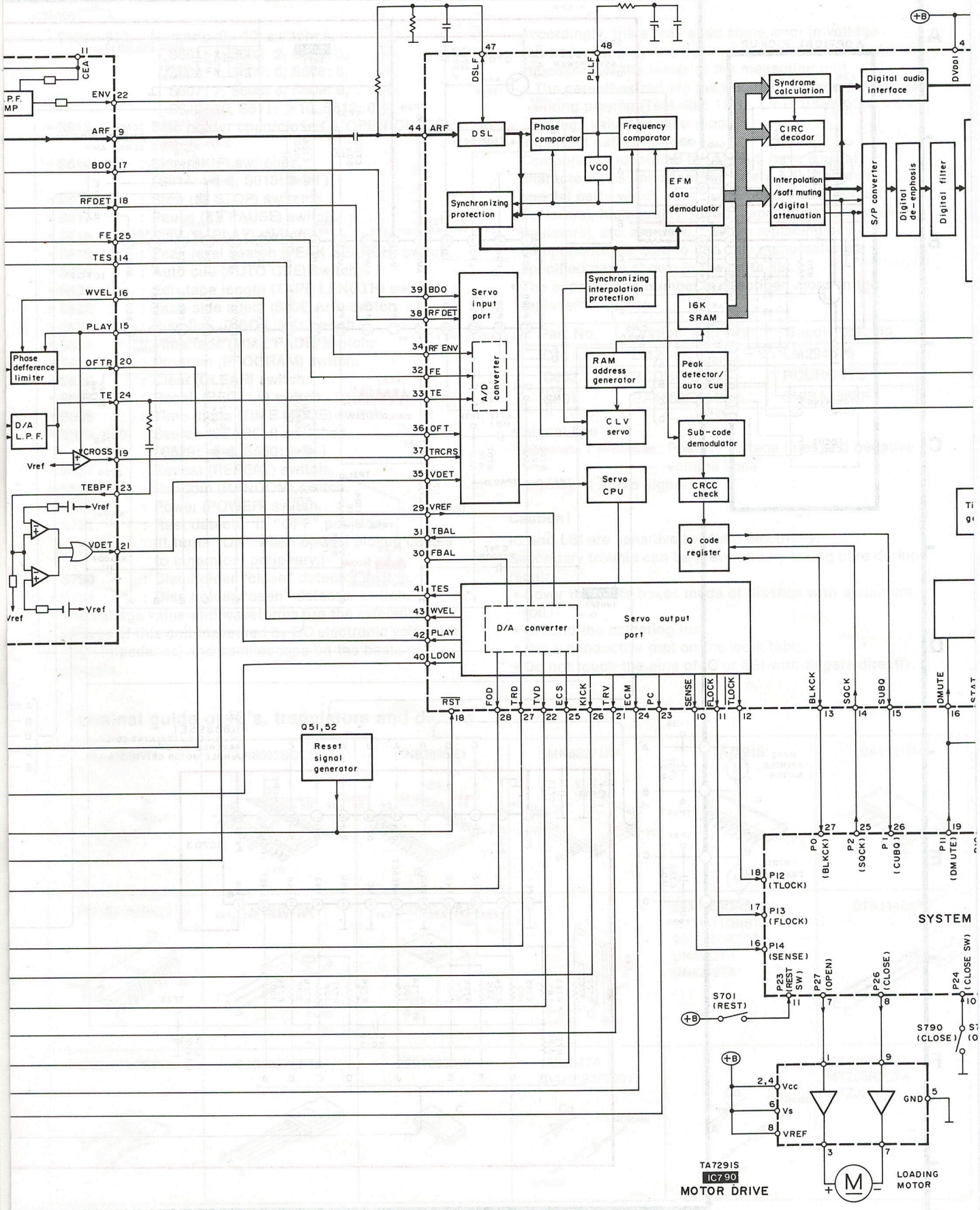

NAL PROCESSOR/
R

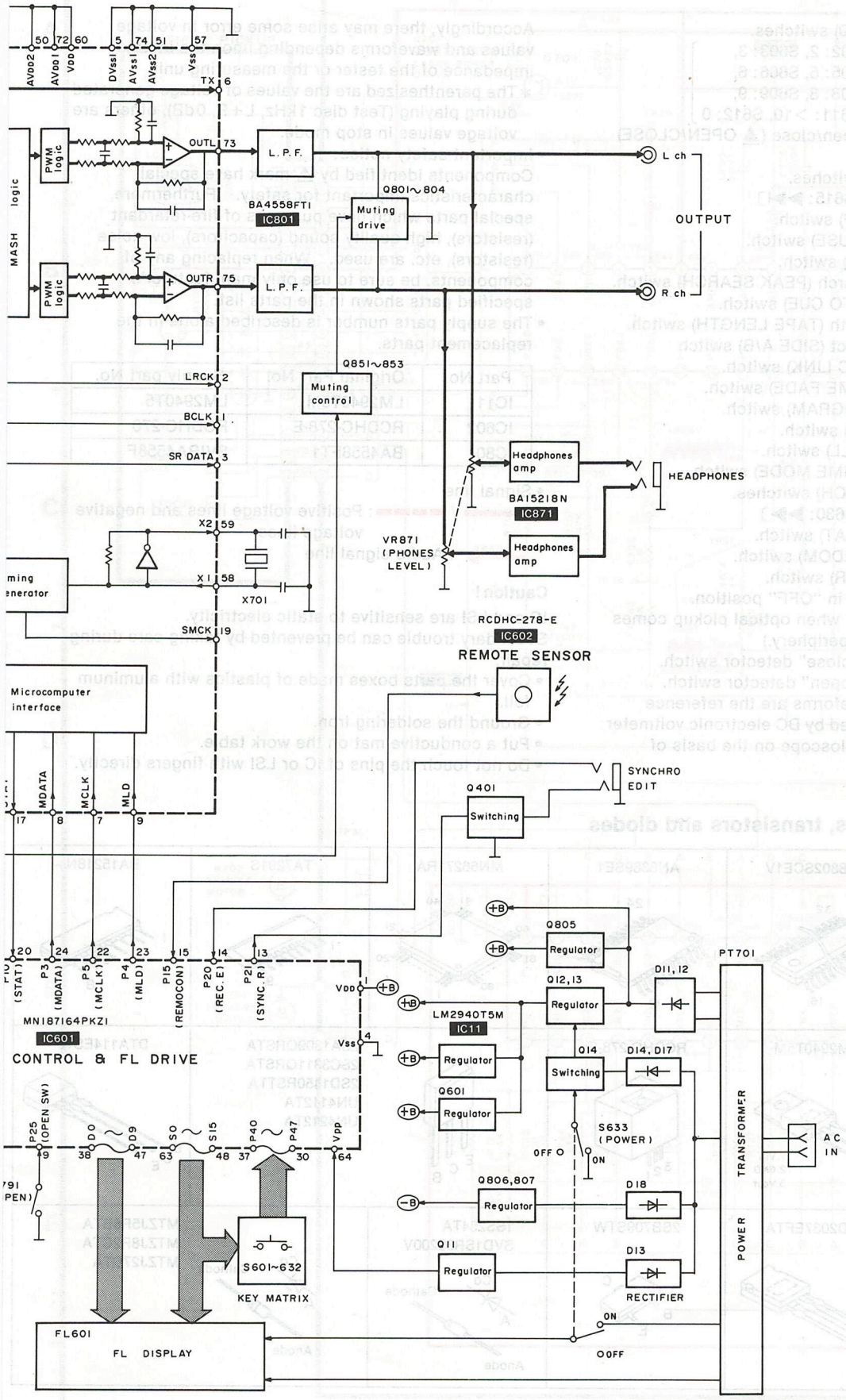

Note:

→ : Audio signal

■ SCHEMATIC DIAGRAM (Parts list on pages 43~46)

(This schematic diagram may be modified at any time with development of new technology.)

Note:

- **S601~612,** : Numeric (0~10) switches.
  [S601: 1, S602: 2, S603: 3, S604: 4, S605: 5, S606: 6, S607: 7, S608: 8, S609: 9, S610: 10, S611: >10, S612: 0]
- **S613** : Disc holder open/close (▲ OPEN/CLOSE) switch.
- **S614, 615** : Skip (SKIP) switches. [S614: I◀◀, S615: ▶▶I]
- **S616** : Stop (■ STOP) switch.
- **S617** : Pause (▮▮ PAUSE) switch.
- **S618** : Play (▶ PLAY) switch.
- **S619** : Peak level search (PEAK SEARCH) switch.
- **S620** : Auto cue (AUTO CUE) switch.
- **S621** : Edit tape length (TAPE LENGTH) switch.
- **S622** : Tape side sdect (SIDE A/B) switch
- **S623** : Disc link (DISC LINK) switch.
- **S624** : Time fade (TIME FADE) switch.
- **S625** : Program (PROGRAM) switch.
- **S626** : Clear (CLEAR) switch.
- **S627** : Recall (RECALL) switch.
- **S628** : Time mode (TIME MODE) switch.
- **S629, 630** : Search (SEARCH) switches. [S629: ◀◀, S630: ▶▶]
- **S631** : Repeat (REPEAT) switch.
- **S632** : Random (RANDOM) switch.
- **S633** : Power (POWER) switch.
- **S701** : Rest detector in "OFF" position. (It turns "ON" when optical pickup comes to innermost periphery.)
- **S790** : Disc holder "close" detector switch.
- **S791** : Disc holder "open" detector switch.
- The voltage value and waveforms are the reference voltage of this unit measured by DC electronic voltmeter (high impedance) and oscilloscope on the basis of chassis.

Accordingly, there may arise some error in voltage values and waveforms depending upon the internal impedance of the tester or the measuring unit.

*The parenthesized are the values of voltage generated during playing (Test disc 1kHz, L+R, 0dB), others are voltage values in stop mode.

- Important safety notice:
  Components identified by ⚠ mark have special characteristics important for safety. Furthermore, special parts which have purposes of fire-retardant (resistors), high-quality sound (capacitors), low-noise (resistors), etc. are used. When replacing any of components, be sure to use only manufacturer's specified parts shown in the parts list.
- The supply parts number is described alone in the replacement parts.

Part No.	Original Part No.	Supply part No.
IC11	LM2940T5M	LM2940T5
IC602	RCDHC-278-E	RCDHC-278
IC801	BA4558FT1	SVIBA4558F

- Signal line
  ▬▬ / ▬ ▬ ▬ : Positive voltage lines and negative voltage lines
  ⇢⇢⇢ : Audio signal line

Caution!

IC and LSI are sensitive to static electricity.
Secondary trouble can be prevented by taking care during repair.

- Cover the parts boxes made of plastics with aluminum foil.
- Ground the soldering iron.
- Put a conductive mat on the work table.
- Do not touch the pins of IC or LSI with fingers directly.

• Terminal guide of IC's, transistors and diodes

BA4558FT1

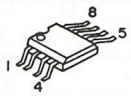

AN8802SCE1V

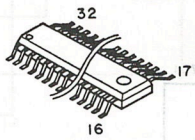

AN8389SE1

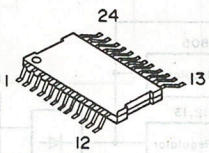

MN66271RA

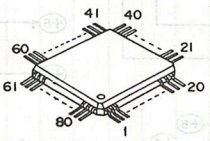

TA7291S

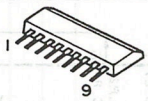

BA15218N

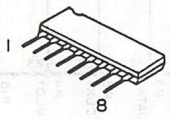

MN187164PKZ1

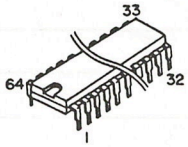

LM2940T5M

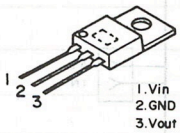

RCDHC-278-E

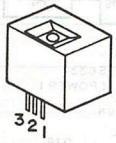

2SA1309QRSTA
2SC3311QRSTA
2SD1450RSTTA
UN4112TA
UN4212TA

DTA114ESTP

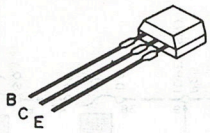

2SB1238QSTV6

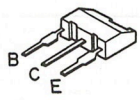

2SD2037EFTA

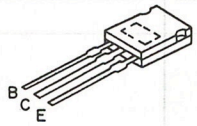

2SB709STW

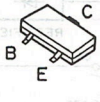

1SS254TA
SVD1SR35200V

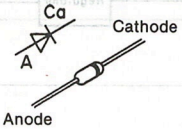

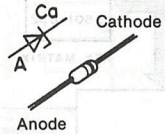

MTZJ5R6BTA
MTZJ8R2CTA
MTZJ27DTA

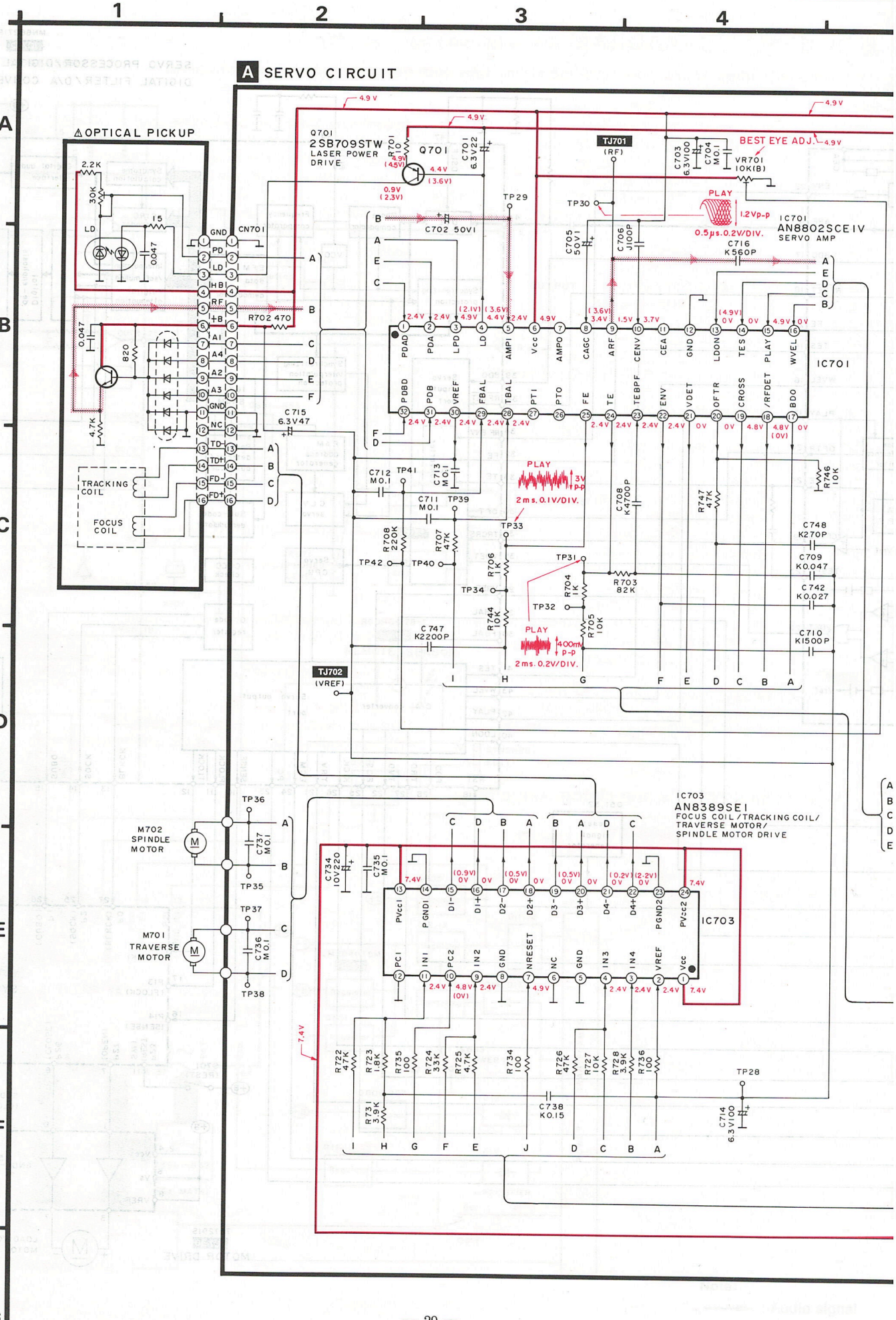
A SERVO CIRCUIT
OPTICAL PICKUP
Q701
2SB709STW
LASER POWER DRIVE
TJ701
(RF)
BEST EYE ADJ.
VR701
10K(B)
PLAY
1.2Vp-p
0.5μs.0.2V/DIV.
IC701
AN8802SCE1V
SERVO AMP
IC701
TRACKING COIL
FOCUS COIL
PLAY
3V p-p
2ms.0.1V/DIV.
PLAY
400mV p-p
2ms.0.2V/DIV.
TJ702
(VREF)
M702
SPINDLE MOTOR
M701
TRAVERSE MOTOR
IC703
AN8389SE1
FOCUS COIL/TRACKING COIL/
TRAVERSE MOTOR/
SPINDLE MOTOR DRIVE
IC703

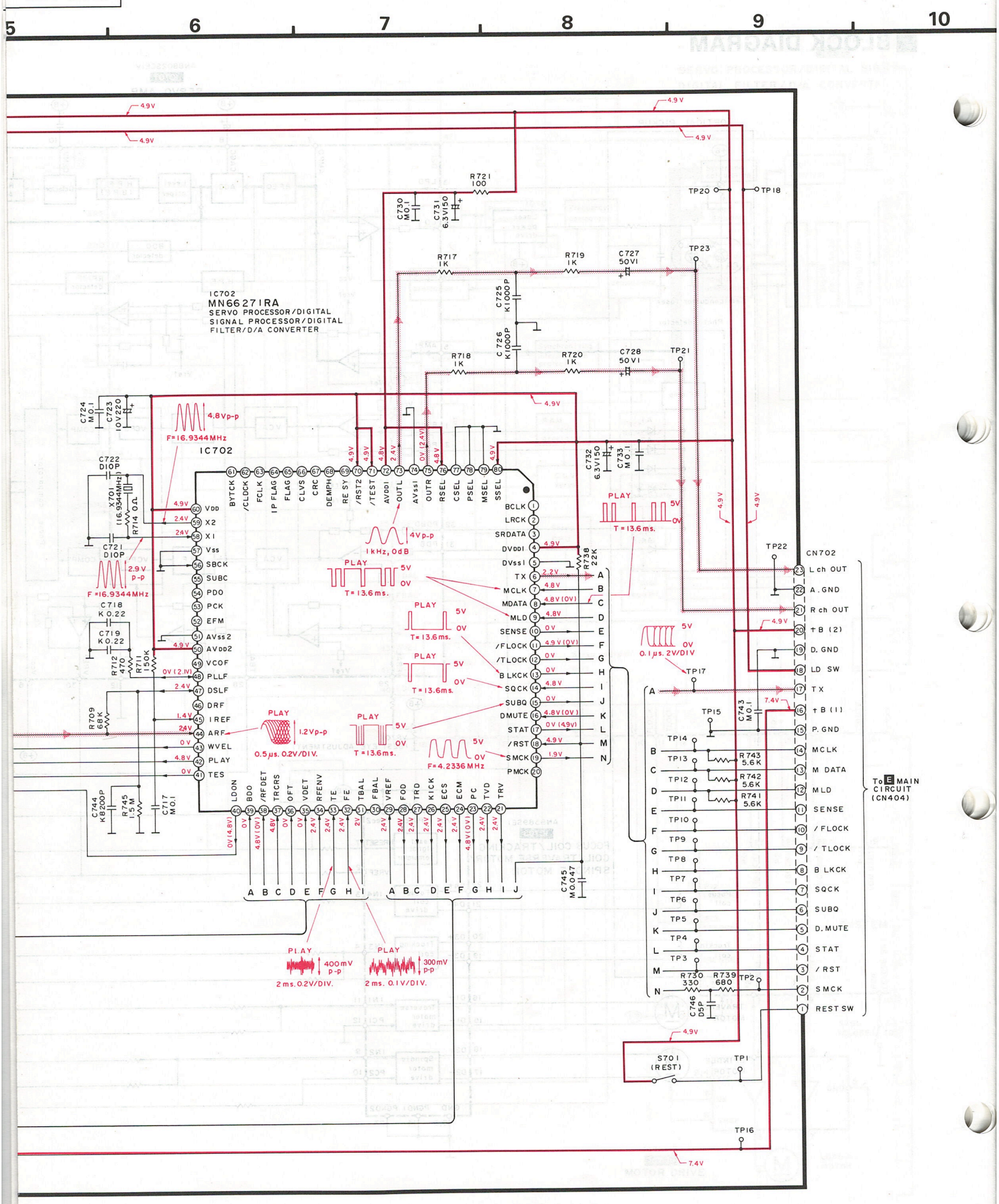
5
6
7
8
9
10
IC702
MN66271RA
SERVO PROCESSOR/DIGITAL
SIGNAL PROCESSOR/DIGITAL
FILTER/D/A CONVERTER
IC702
CN702
To E MAIN CIRCUIT (CN404)
S701 (REST)
PLAY
F=16.9344MHz
4.8Vp-p
2.9V p-p
1kHz, 0dB
4Vp-p
1.2Vp-p
0.5μs. 0.2V/DIV.
F=4.2336MHz
0.1μs. 2V/DIV
400mV p-p
2ms. 0.2V/DIV.
300mV p-p
2ms. 0.1V/DIV.
T=13.6ms.
4.9V
7.4V

B FL/OPERATION CIRCUIT

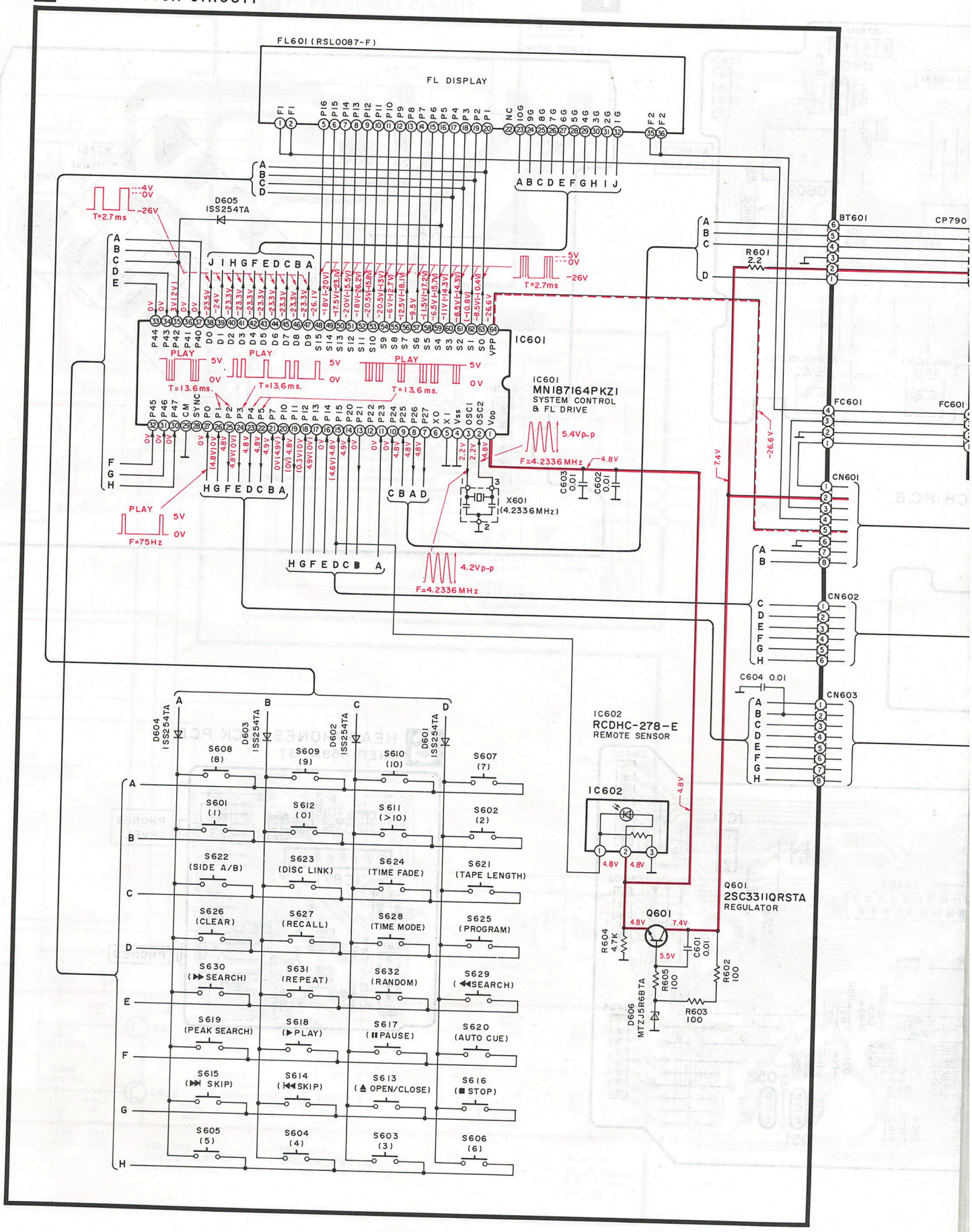

C LOADING MOTOR CIRCUIT

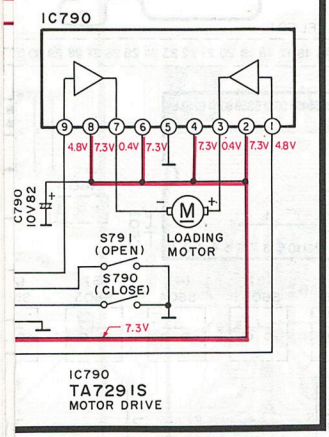

D POWER SWITCH CIRCUIT

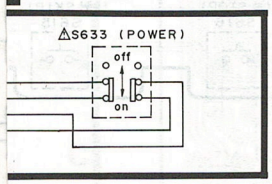

E MAIN CIRCUIT

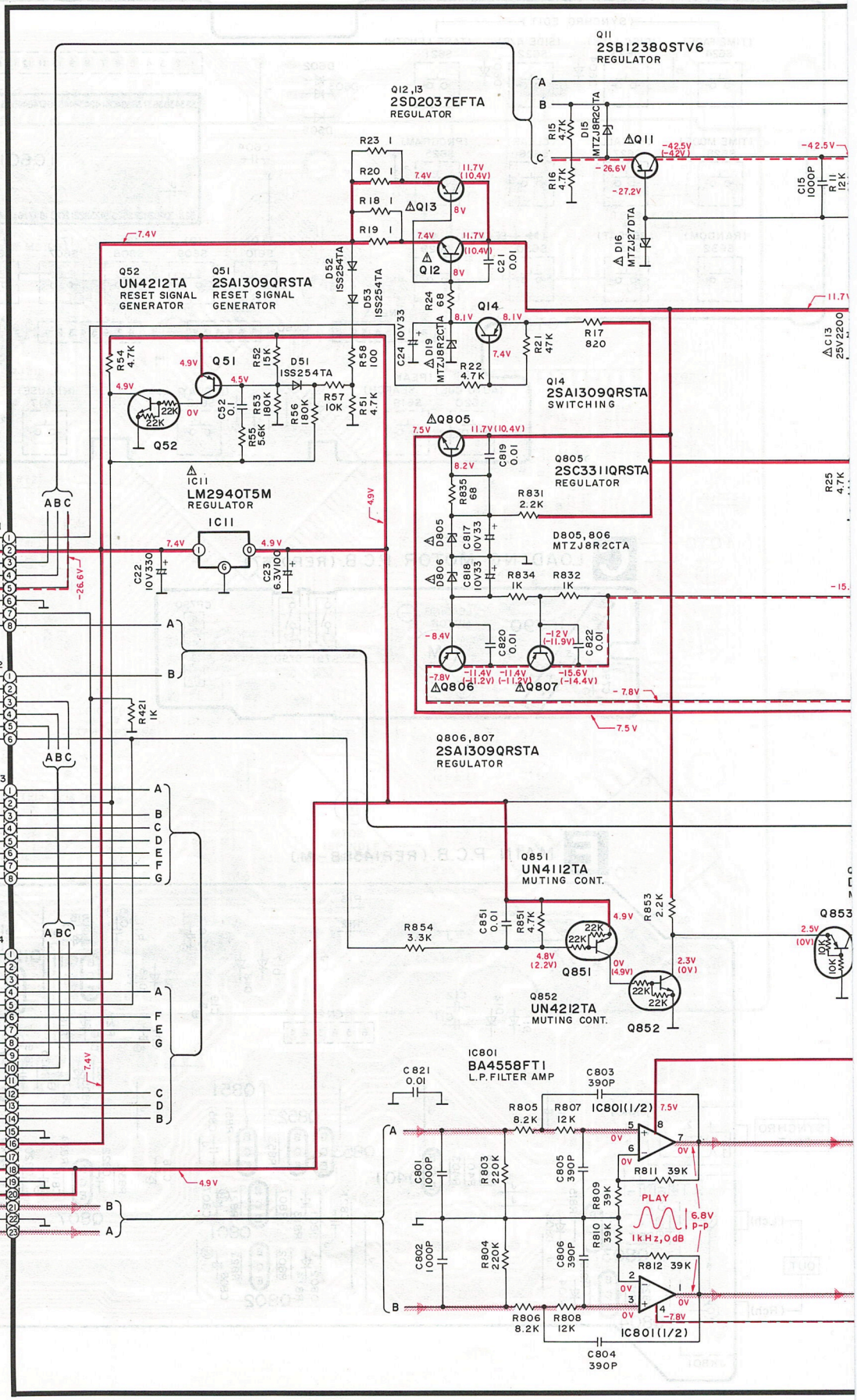

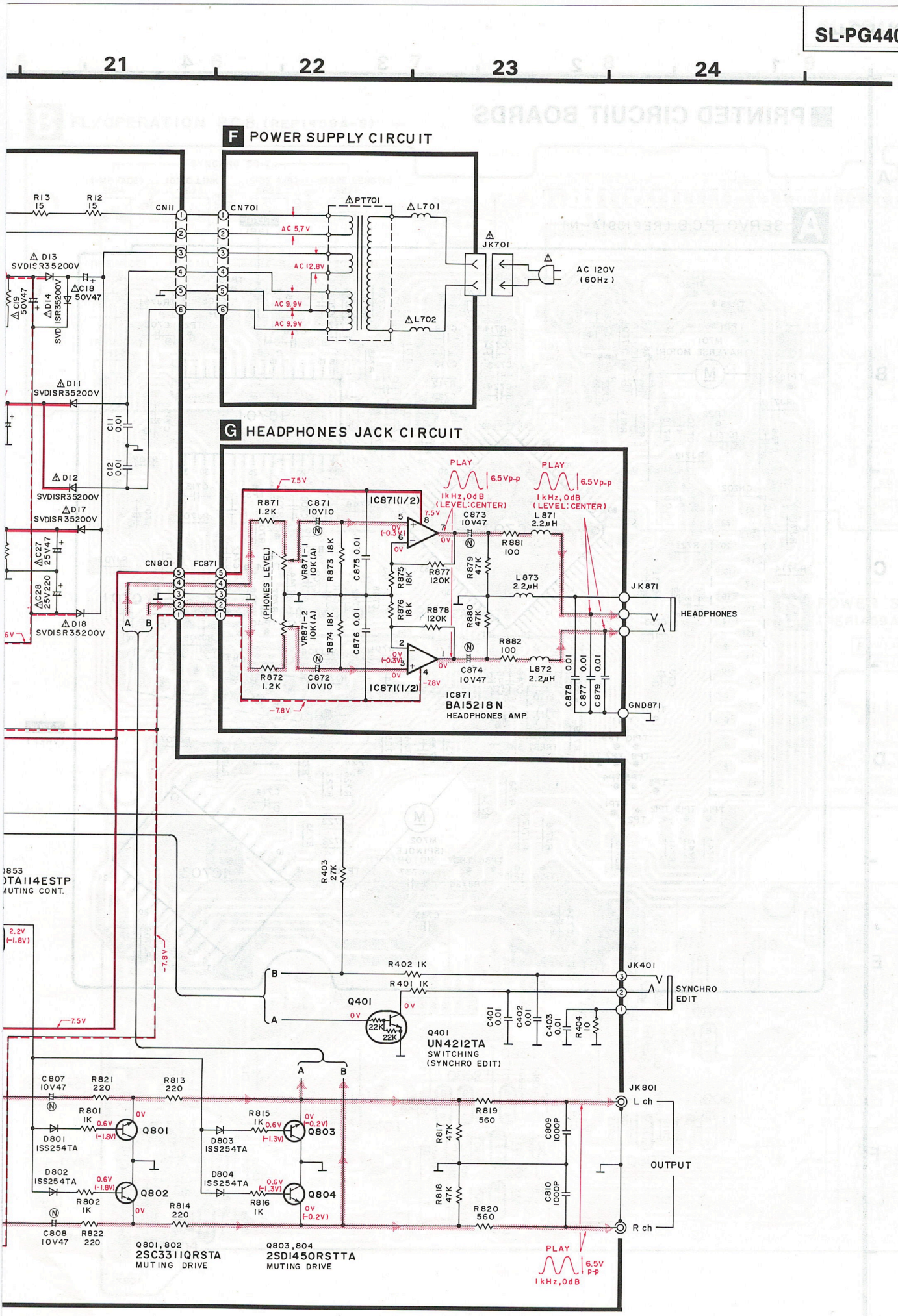
21
22
23
24
F POWER SUPPLY CIRCUIT
CN701
PT701
L701
L702
JK701
AC 120V (60Hz)
AC 5.7V
AC 12.8V
AC 9.9V
AC 9.9V
D13 SVDISR35200V
D14 SVDISR35200V
D11 SVDISR35200V
D12 SVDISR35200V
D17 SVDISR35200V
D18 SVDISR35200V
C18 50V47
C19 50V47
C27 25V47
C28 25V220
C11 0.01
C12 0.01
G HEADPHONES JACK CIRCUIT
CN801
FC871
IC871(1/2)
IC871
BA15218N
HEADPHONES AMP
PLAY 1kHz,0dB (LEVEL:CENTER) 6.5Vp-p
JK871
HEADPHONES
GND871
R871 1.2K
R872 1.2K
C871 10V10
C872 10V10
VR871-1 10K(A)
VR871-2 10K(A)
(PHONES LEVEL)
R873 18K
R874 18K
C875 0.01
C876 0.01
R875 18K
R876 18K
R877 120K
R878 120K
C873 10V47
C874 10V47
L871 2.2μH
L872 2.2μH
L873 2.2μH
R879 47K
R880 47K
R881 100
R882 100
C877 0.01
C878 0.01
C879 0.01
7.5V
-7.8V
R403 27K
R402 1K
R401 1K
Q401
UN4212TA
SWITCHING
(SYNCHRO EDIT)
JK401
SYNCHRO EDIT
C401 0.01
C402 0.01
C403 0.01
R404 10
C807 10V47
C808 10V47
R821 220
R822 220
R813 220
R814 220
R801 1K
R802 1K
R815 1K
R816 1K
Q801
Q802
Q803
Q804
D801 ISS254TA
D802 ISS254TA
D803 ISS254TA
D804 ISS254TA
Q801,802
2SC3311QRSTA
MUTING DRIVE
Q803,804
2SD1450RSTTA
MUTING DRIVE
R819 560
R820 560
R817 47K
R818 47K
C809 1000P
C810 1000P
JK801
L ch
R ch
OUTPUT
PLAY 1kHz,0dB 6.5V p-p

■ PRINTED CIRCUIT BOARDS

A SERVO P.C.B. (REPI391A-N)

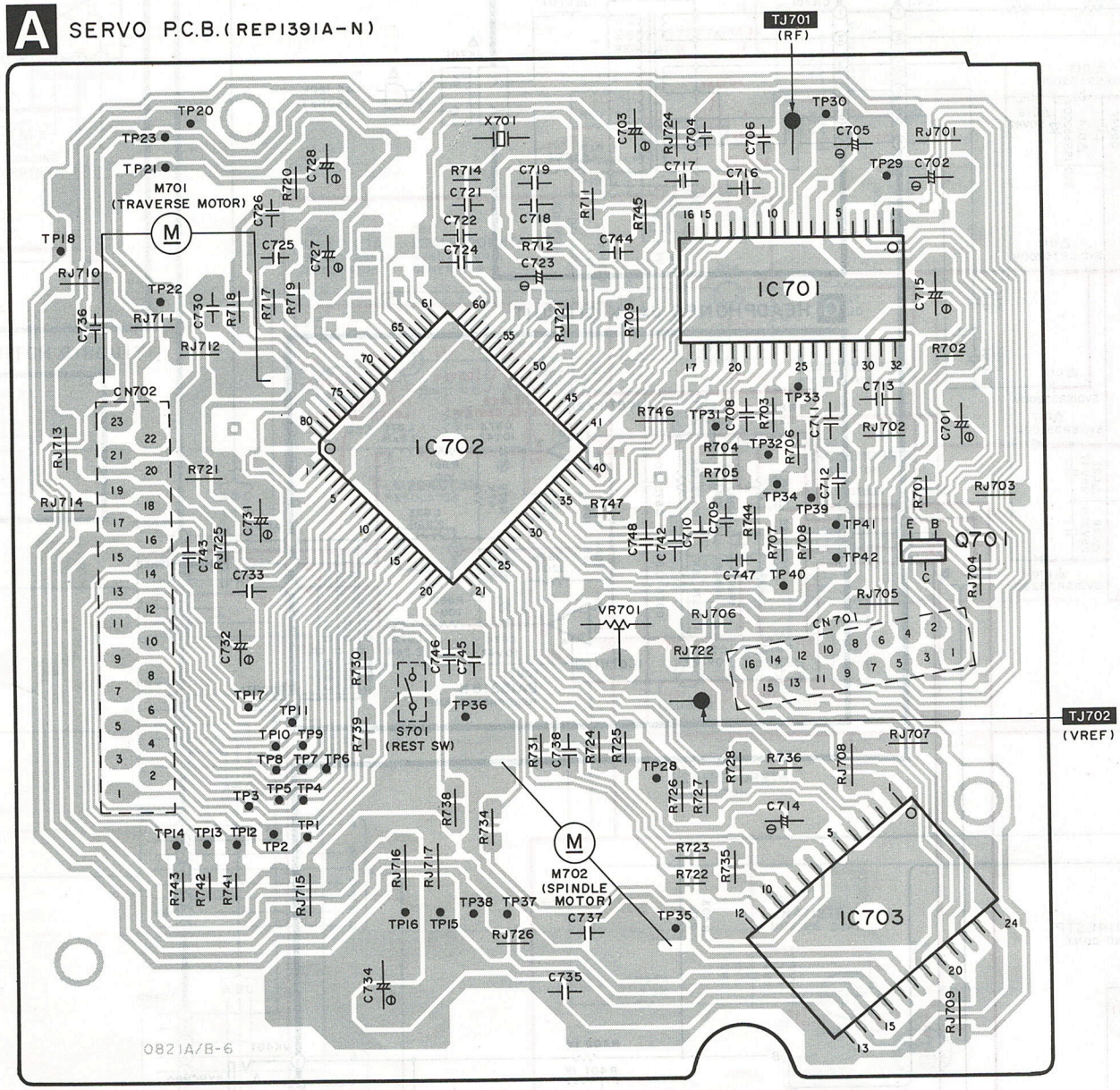

5 6 7 8 9

B FL/OPERATION P.C.B. (REP1459A-S)

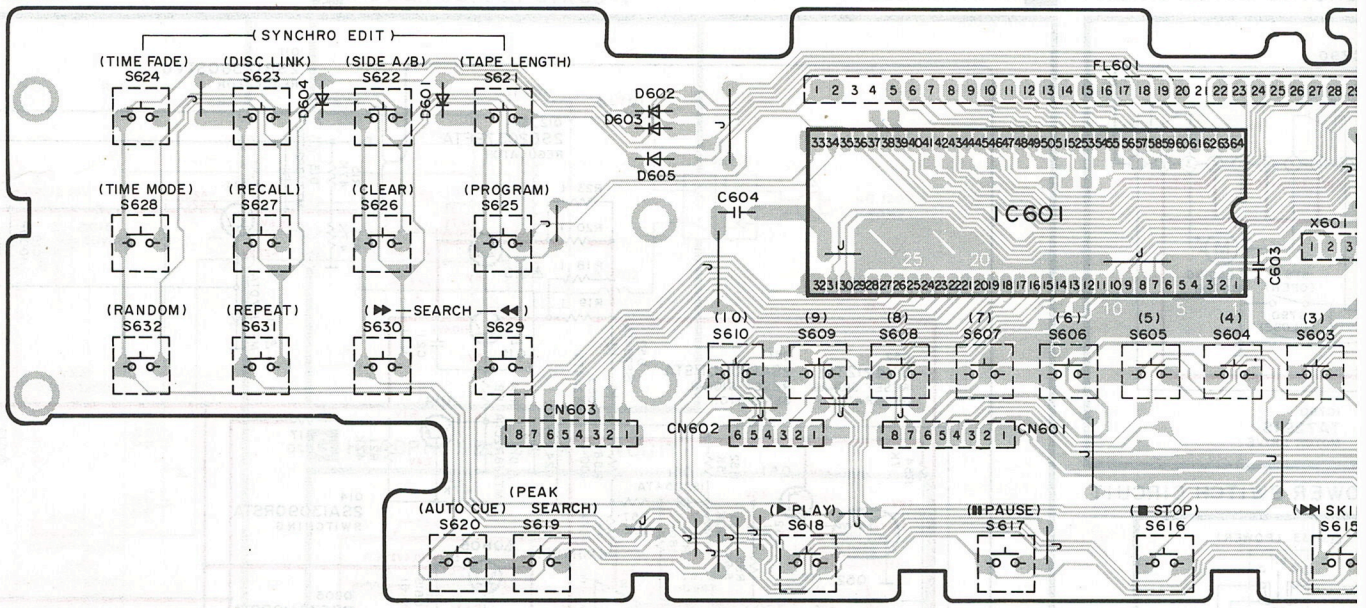

C LOADING MOTOR P.C.B. (REP0767)

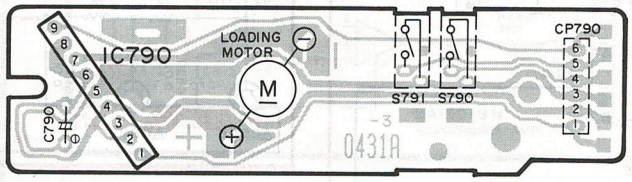

D POWER SW (REP1459A-

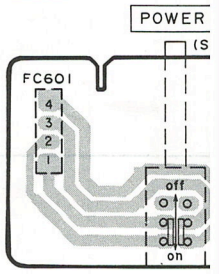

E MAIN P.C.B. (REP1458B-M)

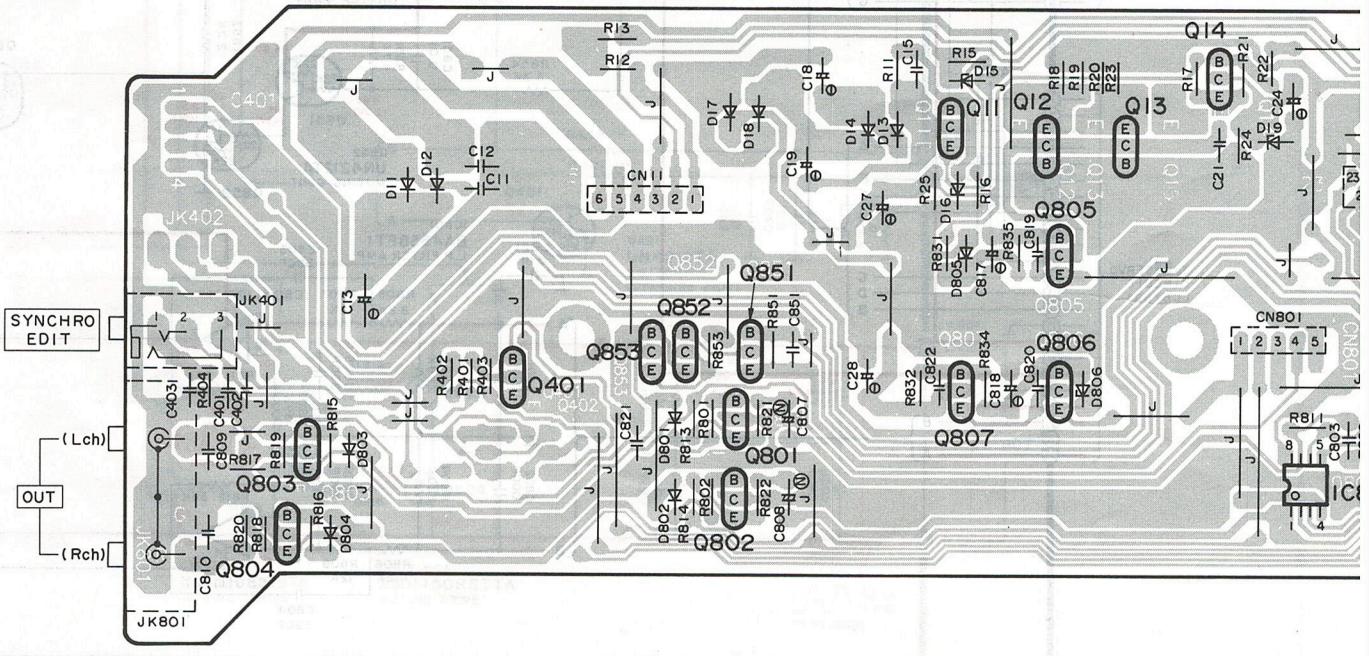

10 11 12 13 14

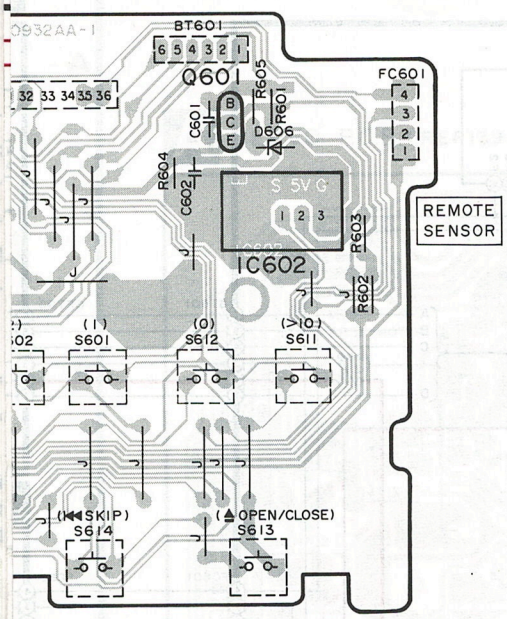

TCH P.C.B.

F POWER SUPPLY P.C.B. (REPI395A-P)

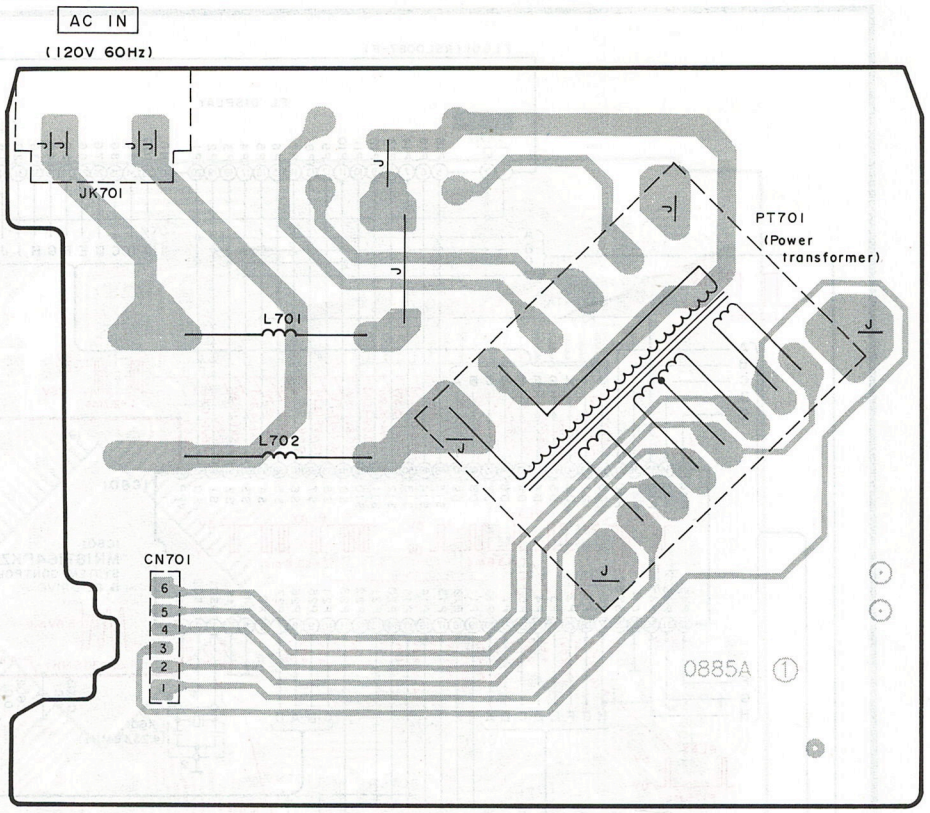

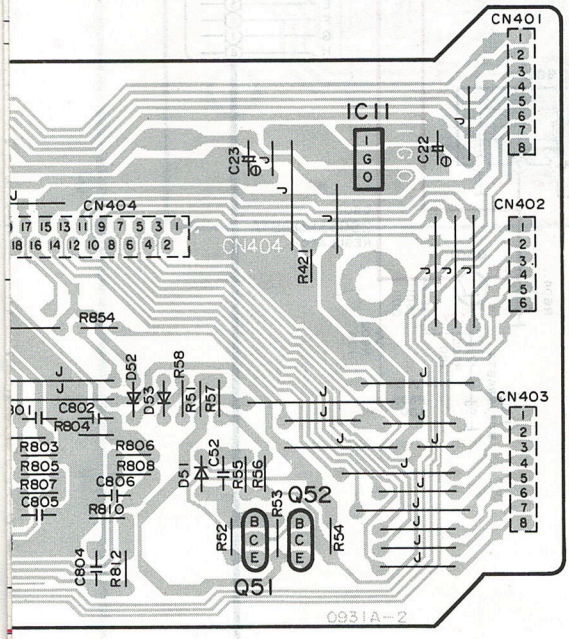

G HEADPHONES JACK P.C.B. (REPI459A-S)

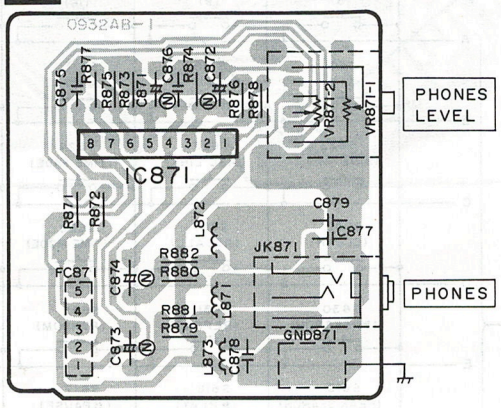

■ WIRING CONNECTION DIAGRAM

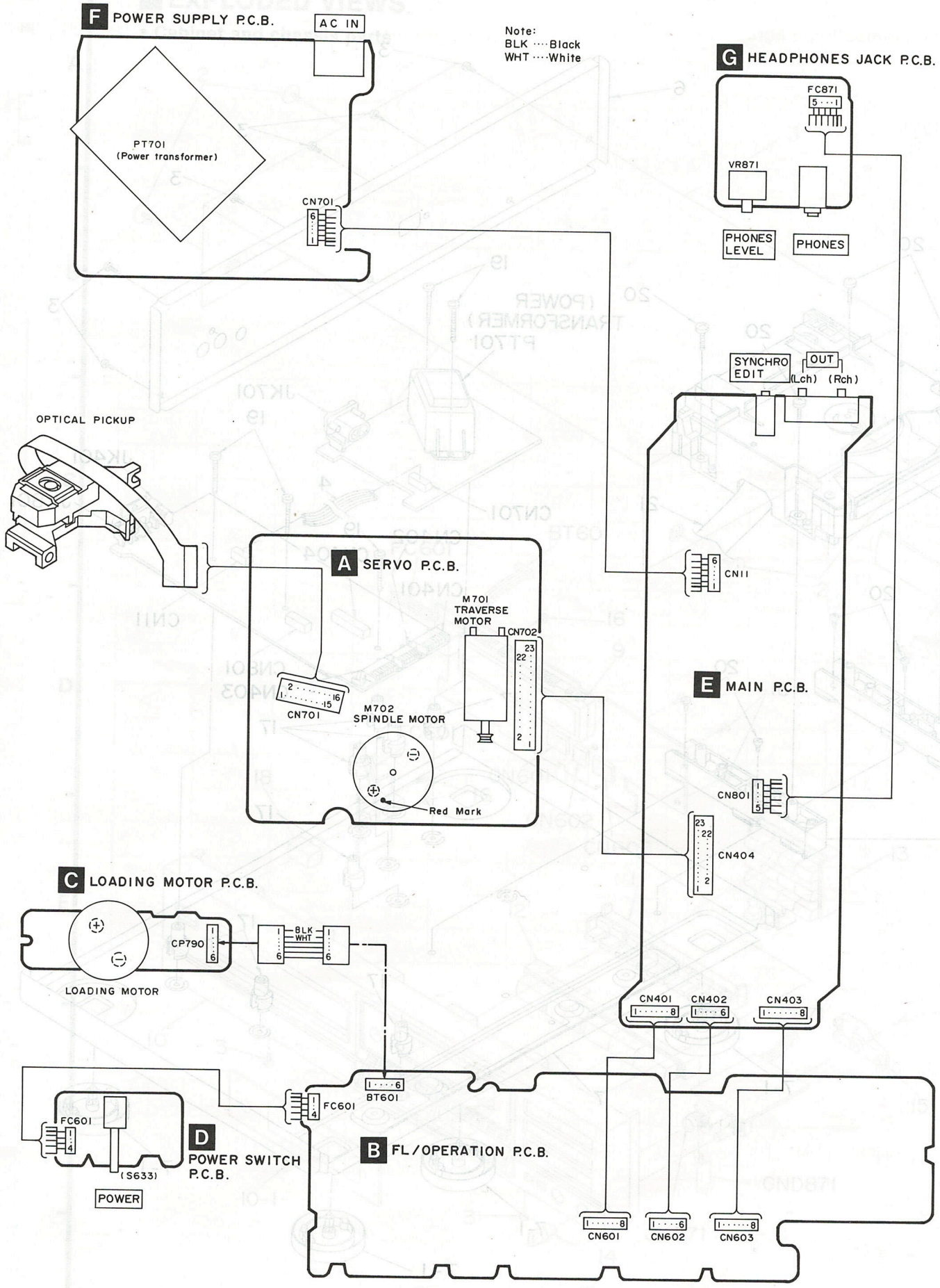

■ INTERNAL CONNECTION OF FL

• Grid connection diagram

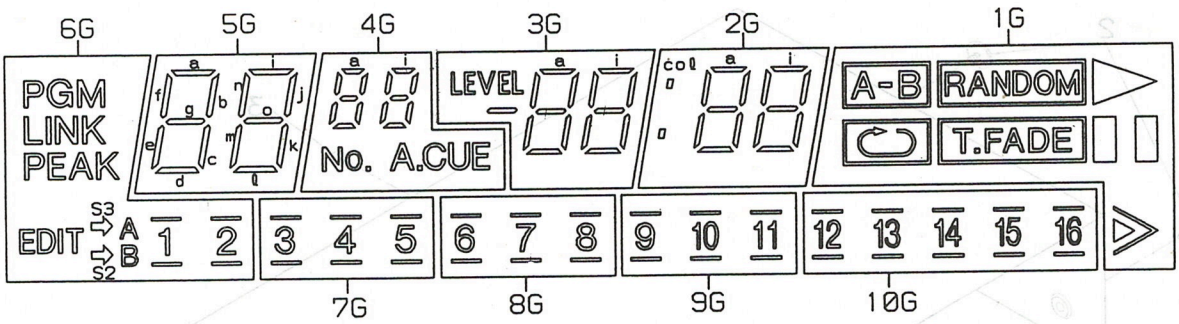

• Anode connection table

	10G	9G	8G	7G	6G	5G	4G	3G	2G	1G
P1	12	9	6	3	EDIT A/B	a	a	a	a	▷
P2	_(12)	_(9)	_(6)	_(3)	S2	b	b	b	b	□□
P3	‾(12)	‾(9)	‾(6)	‾(3)	S3	f	f	f	f	RANDOM
P4	13	10	7	4	1	g	g	g	g	T.FADE
P5	_(13)	_(10)	_(7)	_(4)	_(1)	c	c	c	c	↻
P6	‾(13)	‾(10)	‾(7)	‾(4)	‾(1)	e	e	e	e	A-
P7	14	11	8	5	2	d	d	d	d	B
P8	_(14)	_(11)	_(8)	_(5)	_(2)	–	No.	–	col	▷
P9	‾(14)	‾(11)	‾(8)	‾(5)	‾(2)	i	i	i	i	>
P10	15	–	–	–	PGM	j	j	j	j	–
P11	_(15)	–	–	–	LINK	n	n	n	n	–
P12	‾(15)	–	–	–	–	o	o	o	o	–
P13	16	–	–	–	PEAK	k	k	k	k	–
P14	_(16)	–	–	–	–	m	m	m	m	–
P15	‾(16)	–	–	–	–	l	l	l	l	–
P16	–	–	–	–	–	–	A.CUE	LEVEL	–	–

• Pin connection

PIN NO.	36	35	34	33	32	31	30	29	28	27	26	25	24	23	22	21	20	19	18	17	16	15	14	13	12	11	10	09	08	07	06	05	04	03	02	01
CONNECTION	F22	F2P	NP	NP	1G	2G	3G	4G	5G	6G	7G	8G	9G	10GC	NP	P1	P2	P3	P4	P5	P6	P7	P8	P9	P10	P11	P12	P13	P14	P15	P16	NP	NP	F11	F11

■ EXPLODED VIEWS

• **Cabinet and chassis parts**

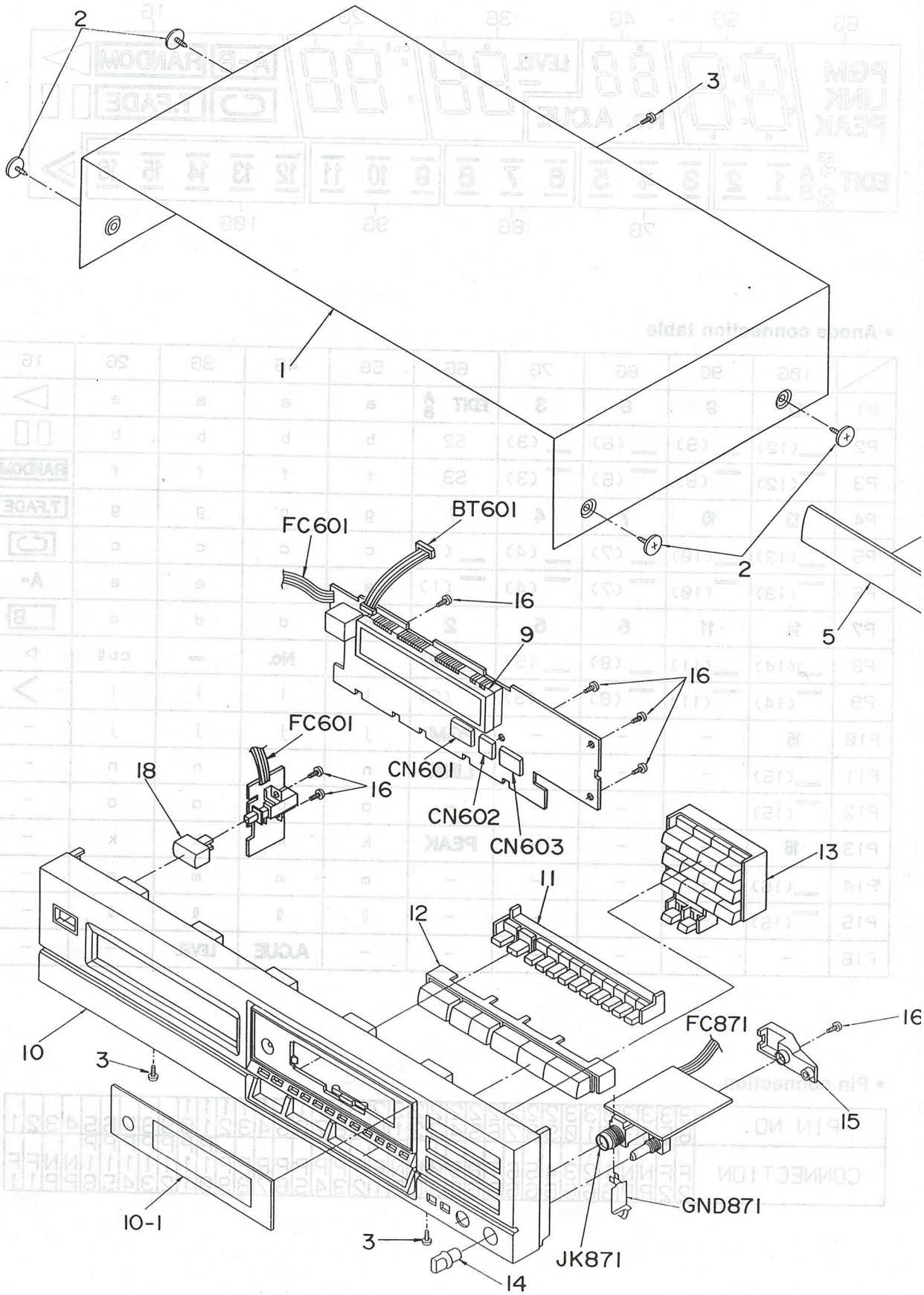

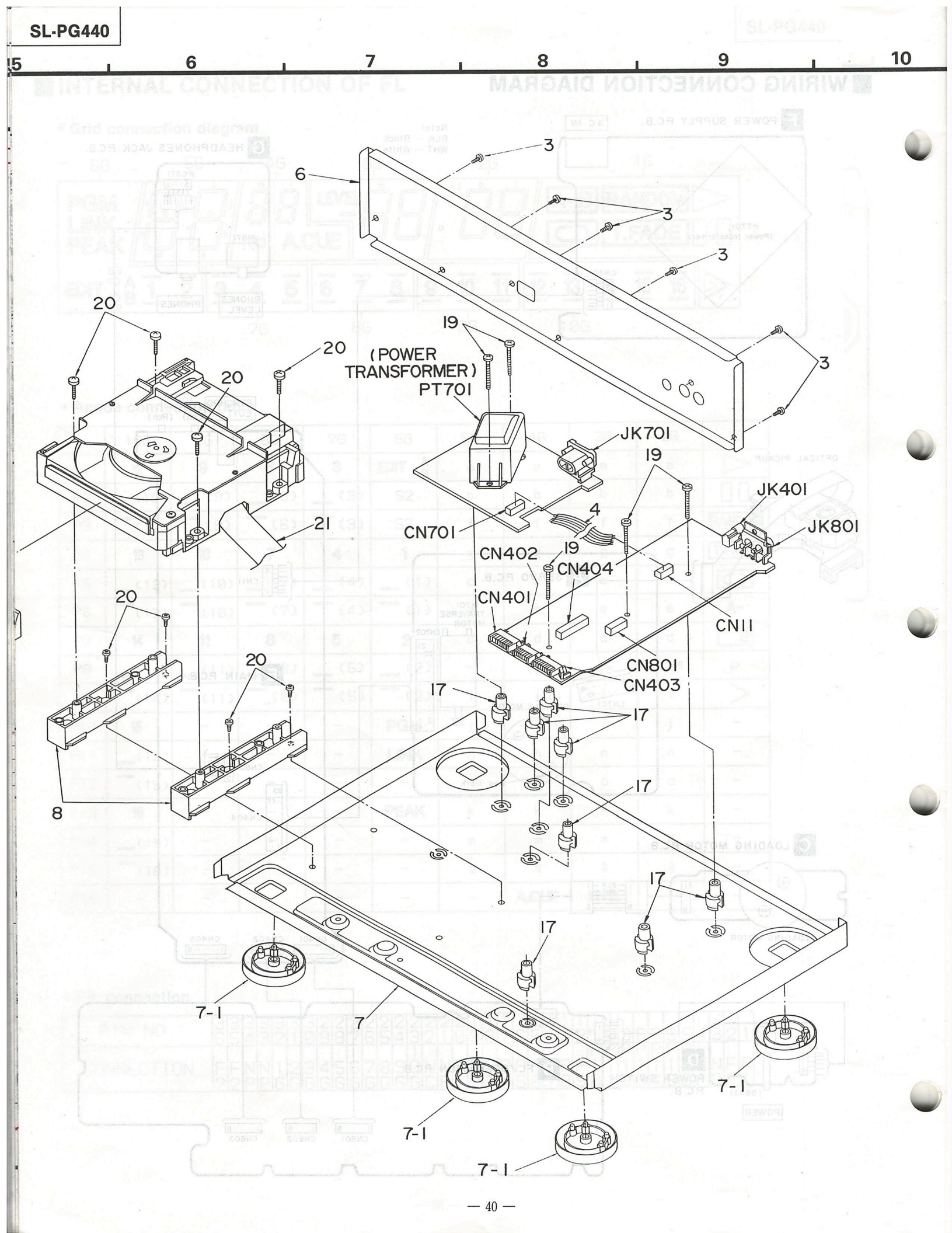
5
6
7
8
9
10
3
6
3
3
3
20
20
20
20
19
(POWER
TRANSFORMER)
PT701
JK701
19
JK401
JK801
4
CN701
CN402
19
CN404
CN401
CN11
CN801
CN403
21
20
20
17
17
17
17
8
7-1
7
7-1
7-1
7-1

• Loading mechanism parts

Note: When changing loading mechanism parts, apply the specified grease to the areas marked "× ×" as shown in the drawing.

Ref. No.	Part No.
❶	SZZ0L30

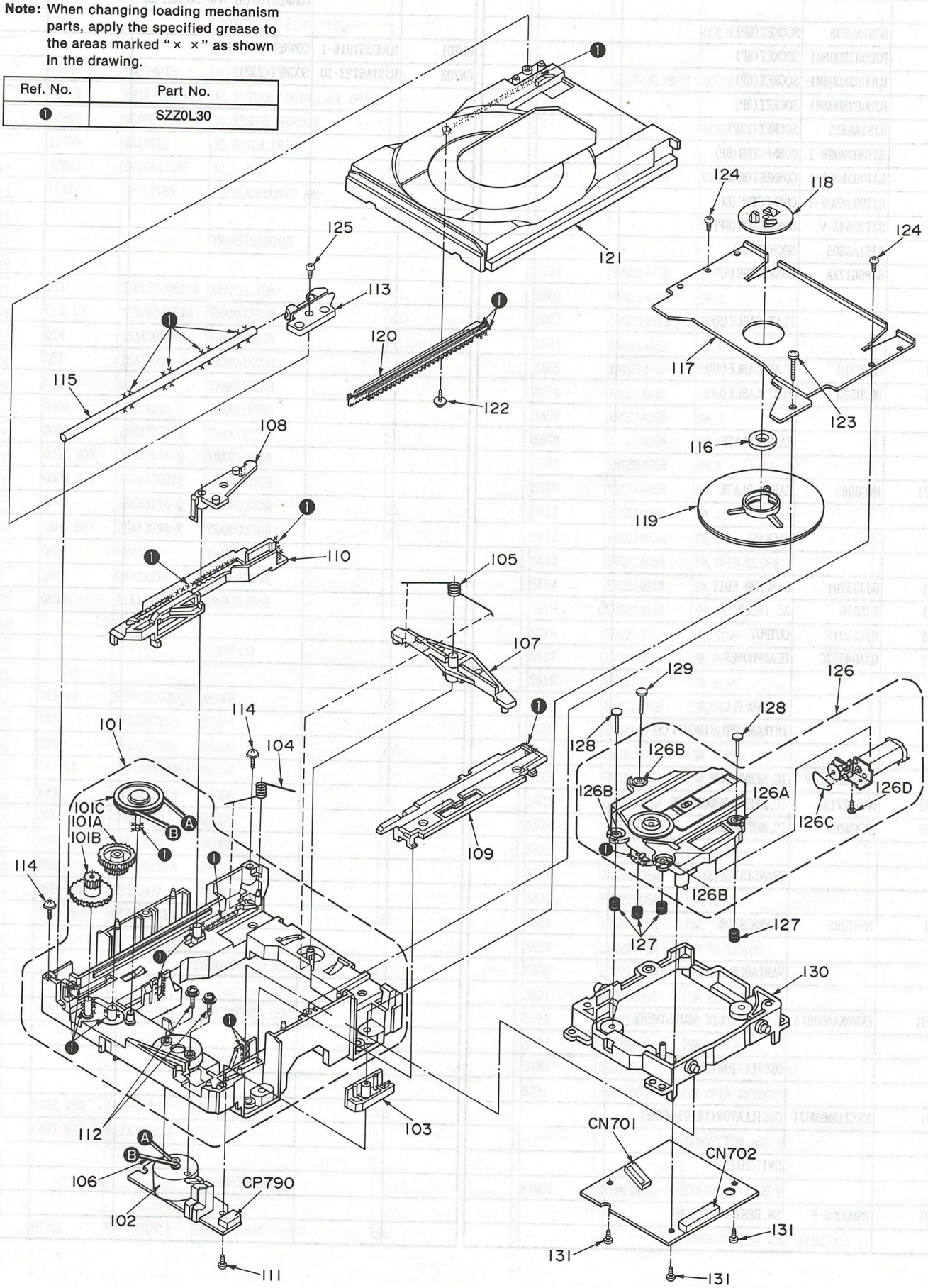

REPLACEMENT PARTS LIST

Notes: *Important safety notice:
Components identified by ⚠ mark have special characteristics important for safety.
Furthermore, special parts which have purposes of fire-retardant (resistors), high-quality sound (capacitors), low-noise (resistors), etc. are used.
When replacing any of components, be sure to use only manufacturer's specified parts shown in the parts list.
*The parenthesized indications in the Remarks columns specify the areas. (Refer to the cover page for area.)
Parts without these indications can be used for all areas.
*Warning: This product uses a laser diode. Refer to caution statements on page 2.

Ref. No.	Part No.	Part Name & Description	Remarks
		CABINET AND CHASSIS	
1	RKM0114-K	CABINET	
2	SNE2129-1	SCREW	
3	XTBS3+8JFZ1	SCREW	
4	REZ0522	FLAT CABLE(6P)	
5	RGK0313-K	TRAY ORNAMENT	
6	RGR0082M-A	REAR PANEL	
7	RFKJLPG440AK	CHASSIS ASS'Y	
7-1	RKA0053-A	FOOT	
8	RMR0359	MECHANISM SPACER	
9	RMN0185-1	FL HOLDER	
10	RFKGLPG440PK	FRONT PANEL ASS'Y	
10-1	RKW0127B	FRONT ORNAMENT PLATE	
11	RGU0278E-K	10 KEY BUTTON	
12	RGU0467A-K2	MAIN BUTTON	
13	RGU0468-K2	SUB BUTTON	
14	RGW0048	PHONES LEVEL KNOB	
15	RMR0360	PHONES PRESSURE PLATE	
16	XTBS26+8J	SCREW	
17	SHE187-2	P.C.B. SUPPORT	
18	RGU0030	POWER BUTTON	
19	XTB3+20JFZ	SCREW	
20	XTB3+8JFZ	SCREW	
21	REZ0528	FLAT CABLE(23P)	
		LOADING MECHANISM	
101	RFKJLPG440BK	MECHANISM CHASSIS ASS'Y	
101A	RDG0142	INTERMEDIATE GEAR	
101B	RDG0193	DRIVE GEAR(1)	
101C	RDP0041	INTERMEDIATE PULLEY	
102	REM0019	LOADING MOTOR ASS'Y	
103	RMA0339	TRAY HOLDER	
104	RME0063	LOCK LEVER SPRING	
105	RME0087	ASSISTANCE SPRING	
106	RMG0158	BELT	
107	RML0177	CONVERSION LEVER	
108	RML0178-1	LOCK LEVER	
109	RMM0059-1	SLIDE PLATE(2)	
110	RMM0079	SLIDE PLATE(1)	
111	XTN26+6G	SCREW	
112	XYN2+F6FZ	SCREW	
113	RDB0036	GUIDE SHAFT HOLDER	
114	RHD20010	SCREW	
115	RMU0046	GUIDE SHAFT	
116	RHM245ZA	MAGNET	
117	RMA0327-1	CLAMP PLATE	
118	RMR0334	FIXED PLATE	
119	RXQ0123	MAGNET HOLDER ASS'Y	
120	RFKNLPG440-K	DRIVE GEAR(2) ASS'Y	
121	RGQ0088-K	DISC TRAY	
122	RHD20009-1	SCREW	
123	XTB3+25GFZ	SCREW	
124	XTN26+6G	SCREW	
125	XTN3+8JFZ	SCREW	
126	RAE0111Z	TRAVERSE DECK UNIT	
126A	SHGD112	FLOATING RUBBER(A)	
126B	SHGD113-1	FLOATING RUBBER(B)	
126C	RDV0023	BELT	
126D	SNSD38	SCREW	
127	RME0109	FLOATING SPRING	
128	RMS0123-1	FIXED PIN(A)	
129	RMS0350	FIXED PIN(B)	
130	RMR0533-K	TRAVERSE CHASSIS	
131	XTV2+6G	SCREW	
		PACKING MATERIAL	
P1	RPG1397	PACKING CASE	
P2	RPN0416	CUSHION	
P3	RPQ0272	PAD	
P4	XZB60X65A01Z	PROTECTION BAG(UNIT)	
P5	XZB22X20C03	PROTECTION BAG(CORD)	
		ACCESSORIES	
A1	RQT1705-P	INSTRUCTION MANUAL	(P)
A1	RFKSLPG440PC	INSTRUCTION MANUAL ASS'Y	(PC)
A2	SJA175-1	AC POWER SUPPLY CORD	(P) ⚠
A2	SJA172	AC POWER SUPPLY CORD	(PC) ⚠
A3	SJP2249-3	STEREO CONNECTION CABLE	
A4	SQX7179	WARRANTY CARD	(P)
A4	SQX7183	WARRANTY CARD	(PC)
A5	SQX9129-1	SERVICENTER LIST	(P)
A5	SQX9131	SERVICENTER LIST	(PC)
A6	RAK-SL304W	REMOTE CONTROL TRANSMITTER	
A6-1	RKK0020-K	BATTERY COVER	FOR R/C TRANSMITTER

Ref. No.	Part No.	Part Name & Description	Remarks
		INTEGRATED CIRCUIT(S)	
IC11	LM2940T5	IC, REGULATOR	⚠
IC601	MN187164PKZ1	IC, SYSTEM CONTROL&FL DRIVE	
IC602	RCDHC-278	IC, REMOTE SENSOR	
IC790	TA7291S	IC, MOTOR DRIVE	
IC801	SVIBA4558F	IC, L. P. F.	
IC871	BA15218N	IC, HEADPHONES AMP	
		TRANSISTOR(S)	
Q11	2SB1238QSTV6	TRANSISTOR	⚠
Q12, 13	2SD2037EFTA	TRANSISTOR	⚠
Q14	2SA1309A-R	TRANSISTOR	
Q51	2SA1309A-R	TRANSISTOR	
Q52	UN4212TA	TRANSISTOR	
Q401	UN4212TA	TRANSISTOR	
Q601	2SC3311A-Q	TRANSISTOR	
Q801, 802	2SC3311A-Q	TRANSISTOR	
Q803, 804	2SD1450RTA	TRANSISTOR	
Q805	2SC3311A-Q	TRANSISTOR	⚠
Q806, 807	2SA1309A-R	TRANSISTOR	⚠
Q851	UN4112	TRANSISTOR	
Q852	UN4212TA	TRANSISTOR	
Q853	DTA114ESTP	TRANSISTOR	
		DIODE(S)	
D11-14	SVD1SR35200A	DIODE	⚠
D15	MTZJ8R2CTA	DIODE	
D16	MTZJ27DTA	DIODE	⚠
D17, 18	SVD1SR35200A	DIODE	⚠
D19	MTZJ8R2CTA	DIODE	⚠
D51-53	1SS254TA	DIODE	
D601-605	1SS254TA	DIODE	
D606	MTZJ5R6BTA	DIODE	
D801-804	1SS254TA	DIODE	
D805, 806	MTZJ8R2CTA	DIODE	⚠
		VARIABLE RESISTOR(S)	
VR871	EVJCB0F02A14	V. R, PHONES LEVEL	
		COIL(S)	
L701, 702	SLQX400-D	COIL	⚠
L871-873	ELEXT2R2KA9	COIL	
		TRANSFORMER(S)	
PT701	RTP1K4C011	POWER TRANSFORMER	⚠

Ref. No.	Part No.	Part Name & Description	Remarks
		OSCILLATOR(S)	
X601	RSXY4M23M01T	OSCILLATOR(4. 2336MHz)	
		DISPLAY TUBE	
FL601	RSL0087-F	DISPLAY TUBE	
		SWITCH(ES)	
S601	EVQ21405R	SW, 1	
S602	EVQ21405R	SW, 2	
S603	EVQ21405R	SW, 3	
S604	EVQ21405R	SW, 4	
S605	EVQ21405R	SW, 5	
S606	EVQ21405R	SW, 6	
S607	EVQ21405R	SW, 7	
S608	EVQ21405R	SW, 8	
S609	EVQ21405R	SW, 9	
S610	EVQ21405R	SW, 10	
S611	EVQ21405R	SW, >10	
S612	EVQ21405R	SW, 0	
S613	EVQ21405R	SW, OPEN/CLOSE	
S614	EVQ21405R	SW, SKIP(R)	
S615	EVQ21405R	SW, SKIP(F)	
S616	EVQ21405R	SW, STOP	
S617	EVQ21405R	SW, PAUSE	
S618	EVQ21405R	SW, PLAY	
S619	EVQ21405R	SW, PEAK SEARCH	
S620	EVQ21405R	SW, AUTO CUE	
S621	EVQ21405R	SW, TAPE LENGTH	
S622	EVQ21405R	SW, SIDE A/B	
S623	EVQ21405R	SW, DISC LINK	
S624	EVQ21405R	SW, TIME FADE	
S625	EVQ21405R	SW, PROGRAM	
S626	EVQ21405R	SW, CLEAR	
S627	EVQ21405R	SW, RECALL	
S628	EVQ21405R	SW, TIME MODE	
S629	EVQ21405R	SW, SEARCH(R)	
S630	EVQ21405R	SW, SEARCH(F)	
S631	EVQ21405R	SW, REPEAT	
S632	EVQ21405R	SW, RANDOM	
S633	RSP2B010	SW, POWER	⚠
S790	RSH1A005	SW, CLOSE DETECTOR	
S791	RSH1A005	SW, OPEN DETECTOR	
		CONNECTOR ASS'Y	
BT601	REX0459	CONNECTOR ASS'Y	
		CONNECTOR(S) AND SOCKET(S)	

Ref. No.	Part No.	Part Name & Description	Remarks
CN11	RJS1A6606	SOCKET(6P)	
CN401	RJU003K008M1	SOCKET(8P)	
CN402	RJU003K006M1	SOCKET(6P)	
CN403	RJU003K008M1	SOCKET(8P)	
CN404	RJS1A6823	SOCKET(23P)	
CN601	RJT003K008-1	CONNECTOR(8P)	
CN602	RJT003K006-1	CONNECTOR(6P)	
CN603	RJT003K008-1	CONNECTOR(8P)	
CN701	SJT30643-V	CONNECTOR(6P)	
CN801	RJS1A6605	SOCKET(5P)	
CP790	RJP6G17ZA	CONNECTOR(6P)	
		FLAT CABLE(S)	
FC601	REZ0310	FLAT CABLE(4P)	
FC871	REZ0523	FLAT CABLE(5P)	
		EARTH PLATE	
GND871	RMC0063	EARTH PLATE	
		JACK(S)	
JK401	RJJ33T01	SYNCHRO EDIT	
JK701	SJSD16	AC INLET	⚠
JK801	RJH3201N	OUTPUT	
JK871	QJA0455ZC	HEADPHONES	
		<SERVO P.C.B.>	
		INTEGRATED CIRCUIT(S)	
IC701	AN8802SCE1V	IC, SERVO AMP	
IC702	MN66271RA	IC, SERVO PROCESSOR	
IC703	AN8389SE1	IC, MOTOR DRIVE	
		TRANSISTOR(S)	
Q701	2SB709S	TRANSISTOR	
		VARIABLE RESISTOR(S)	
VR701	EVNDXAA00B14	V.R, BEST EYE ADJUSTMENT	
		OSCILLATOR(S)	
X701	RSXZ16M9M02T	OSCILLATOR(16.9344MHz)	
		SWITCH(ES)	
S701	RSM0006-P	SW, REST DETECTOR	

Ref. No.	Part No.	Part Name & Description	Remarks
		CONNECTOR(S) AND SOCKET(S)	
CN701	RJU035T016-1	CONNECTOR(16P)	
CN702	RJS1A6723-1Q	SOCKET(23P)	

■ RESISTORS AND CAPACITORS

Notes : * Capacity values are in microfarads (uF) unless specified otherwise, P=Pico-farads (pF) F=Farads (F)
* Resistance values are in ohms, unless specified otherwise, 1K=1,000 (OHM), 1M=1,000k (OHM)

Ref. No.	Part No.	Values & Remarks
		RESISTORS
R11	ERDS2TJ123	1/4W 12K
R12, 13	ERDS2TJ150T	1/4W 15
R15, 16	ERDS2TJ472	1/4W 4.7K
R17	ERDS2TJ821	1/4W 820
R18-20	ERDS2TJ1R0	1/4W 1.0
R21	ERDS2TJ473	1/4W 47K
R22	ERDS2TJ472	1/4W 4.7K
R23	ERDS2TJ1R0	1/4W 1.0
R24	ERDS2TJ680T	1/4W 68
R25	ERDS2TJ472	1/4W 4.7K
R51	ERDS2TJ472	1/4W 4.7K
R52	ERDS2TJ153	1/4W 15K
R53	ERDS2TJ184T	1/4W 180K
R54	ERDS2TJ472	1/4W 4.7K
R55	ERDS2TJ562	1/4W 5.6K
R56	ERDS2TJ184T	1/4W 180K
R57	ERDS2TJ103	1/4W 10K
R58	ERDS2TJ101	1/4W 100
R401, 402	ERDS2TJ102	1/4W 1K
R403	ERDS2TJ273	1/4W 27K
R404	ERDS2TJ100	1/4W 10
R421	ERDS2TJ102	1/4W 1K
R601	ERDS2TJ2R2T	1/4W 2.2
R602, 603	ERDS2TJ101	1/4W 100
R604	ERDS2TJ472	1/4W 4.7K
R605	ERDS2TJ101	1/4W 100
R801, 802	ERDS2TJ102	1/4W 1K
R803, 804	ERDS2TJ224T	1/4W 220K
R805, 806	ERDS2TJ822	1/4W 8.2K
R807, 808	ERDS2TJ123	1/4W 12K
R809-812	ERDS2TJ393	1/4W 39K
R813, 814	ERDS2TJ221	1/4W 220
R815, 816	ERDS2TJ102	1/4W 1K
R817, 818	ERDS2TJ473	1/4W 47K
R819, 820	ERDS2TJ561	1/4W 560
R821, 822	ERDS2TJ221	1/4W 220
R831	ERDS2TJ222	1/4W 2.2K
R832	ERDS2TJ102	1/4W 1K
R834	ERDS2TJ102	1/4W 1K
R835	ERDS2TJ680T	1/4W 68
R851	ERDS2TJ472	1/4W 4.7K
R853	ERDS2TJ222	1/4W 2.2K
R854	ERDS2TJ332	1/4W 3.3K
R871, 872	ERDS2TJ122	1/4W 1.2K
R873-876	ERDS2TJ183T	1/4W 18K
R877, 878	ERDS2TJ124T	1/4W 120K
R879, 880	ERDS2TJ473	1/4W 47K
R881, 882	ERDS2TJ101	1/4W 100
		CAPACITORS
C11, 12	ECBT1E103ZF	25V 0.01U
C13	ECEA1EU222B	25V 2200U ⚠
C15	ECBT1H102KB5	50V 1000P
C18, 19	ECA1HM470B	50V 47U ⚠
C21	ECBT1E103ZF	25V 0.01U
C22	ECA1AM331B	10V 330U
C23	ECEA0JKA101B	6.3V 100U
C24	ECEA1AKA330B	10V 33U
C27	ECEA1EKA470B	25V 47U ⚠
C28	ECA1EM221B	25V 220U ⚠
C52	ECFR1E104ZF5	25V 0.1U
C401-403	ECBT1E103ZF	25V 0.01U
C601-604	ECBT1E103ZF	25V 0.01U
C790	ECA1AKF820E	10V 82U
C801, 802	ECBT1H102KB5	50V 1000P
C803-806	ECCR1H391J5	50V 390P
C807, 808	ECEA1AN470S	10V 47U
C809, 810	ECBT1H102KB5	50V 1000P
C817, 818	ECEA1AKA330B	10V 33U
C819-822	ECBT1E103ZF	25V 0.01U
C851	ECBT1E103ZF	25V 0.01U
C871, 872	ECEA1AKN100B	10V 10U
C873, 874	ECEA1AKN470B	10V 47U
C875-879	ECBT1E103ZF	25V 0.01U
		RESISTORS
R701	ERJ6GEYJ100	1/10W 10
R702	ERJ6GEYJ471V	1/10W 470
R703	ERJ6GEYJ823	1/10W 82K
R704	ERJ6GEYJ102A	1/10W 1K
R705	ERJ6GEYJ103V	1/10W 10K
R706	ERJ6GEYJ102A	1/10W 1K
R707	ERJ6GEYJ473V	1/10W 47K
R708	ERJ6GEYJ224V	1/10W 220K
R709	ERJ6GEYJ683V	1/10W 68K
R711	ERJ6GEYJ154V	1/10W 150K
R712	ERJ6GEYJ471V	1/10W 470
R714	ERJ6GEY0R00A	1/10W 0.00
R717-720	ERJ6GEYJ102A	1/10W 1K
R721	ERJ8GEYJ101V	1/8W 100
R722	ERJ6GEYJ473V	1/10W 47K
R723	ERJ6GEYJ182V	1/10W 1.8K
R724	ERJ6GEYJ333V	1/10W 33K
R725	ERJ6GEYJ472V	1/10W 4.7K
R726	ERJ6GEYJ473V	1/10W 47K
R727	ERJ6GEYJ103V	1/10W 10K
R728	ERJ6GEYJ392V	1/10W 3.9K
R730	ERJ6GEYJ331V	1/10W 330
R731	ERJ6GEYJ392V	1/10W 3.9K
R734-736	ERJ6GEYJ101V	1/10W 100
R738	ERJ6GEYJ223V	1/10W 22K
R739	ERJ6GEYJ681V	1/10W 680
R741-743	ERJ6GEYJ562V	1/10W 5.6K
R744	ERJ6GEYJ103V	1/10W 10K
R745	ERJ6GEYJ155V	1/10W 1.5M
R746	ERJ8GEYJ103V	1/8W 10K
R747	ERJ6GEYJ473V	1/10W 47K
		CHIP JUMPERS
RJ701-717	ERJ8GEY0R00A	CHIP JUMPER
RJ721, 722	ERJ6GEY0R00A	CHIP JUMPER
RJ724-726	ERJ6GEY0R00A	CHIP JUMPER
		CAPACITORS
C701	ECEA0JKA220	6.3V 22U
C702	ECEA1HKA010I	50V 1U
C703	ECEA0JKA101I	6.3V 100U
C704	ECUZ1E104MBN	25V 0.1U
C705	ECEA1HKA010I	50V 1U
C706	ECUE1H101JCN	50V 100P
C708	ECUE1H472KBN	50V 4700P
C709	ECUE1C473KBN	16V 0.047U
C710	ECUE1H152KBN	50V 1500P
C711, 712	ECUZ1E104MBN	25V 0.1U
C713	ECUV1C104MBM	16V 0.1U
C714	ECEA0JKA101I	6.3V 100U
C715	ECEA0JKA470I	6.3V 47U
C716	ECUE1H561KBN	50V 560P
C717	ECUZ1E104MBN	25V 0.1U
C718, 719	ECUV1C224KBM	16V 0.22U
C721, 722	ECUE1H100DCN	50V 10P
C723	ECEA1AKA221I	10V 220U
C724	ECUV1C104MBM	16V 0.1U
C725, 726	ECUE1H102KBN	16V 0.1U
C727, 728	ECEA1HPK010I	50V 1U
C730	ECUZ1E104MBN	25V 0.1U
C731, 732	ECA05SD151I	6.3V 150U
C733	ECUZ1E104MBN	25V 0.1U
C734	ECEA1AKA221I	10V 220U

Ref. No.	Part No.	Values & Remarks
C735-737	ECUZNE104MBN	25V 0.1U
C738	ECUV1C154KBN	16V 0.15U
C742	ECUV1E273KBN	25V 0.027U
C743	ECUZNE104MBN	25V 0.1U
C744	ECUE1E822KBN	25V 8200P
C745	ECUE1C473MBN	16V 0.047U
C746	ECUE1H050DCN	50V 5P
C747	ECUE1H222KBN	50V 2200P
C748	ECUV1H271KBM	50V 270P

■ PACKAGING

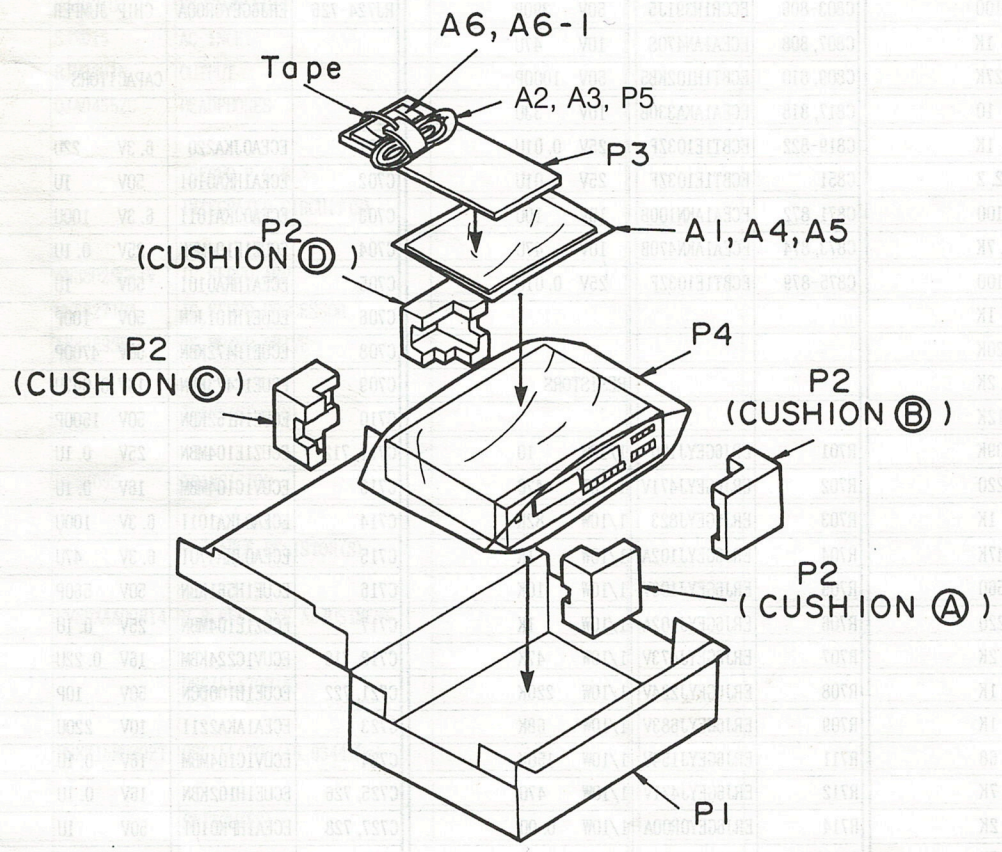

(CUSHION ⒶⒷⒸⒹ : RPN0416)

Printed in Japan
H930105820 NH/YU/TN